# Pipes & Fittings Catalogue

## GLOBAL COMPANY
## GLOBAL CARE



# TECHNICAL SPECIFICATION OF DUCTILE IRON PIPE FITTINGS

| Permissible Deviation On Lengths of Fittings | | |
|---|---|---|
| **Type of Fittings** | **DN (mm)** | **Deviation (mm)** |
| Flange Socket, Flange Spigot, Collars, Tapers | 80-1200 | ±25 |
| | 1400-2000 | ±35 |
| Tees | 80-1200 | ±50<br>-25 |
| | 1400-200 | +75<br>-35 |
| 90º (1/4) Bends | 80-2000 | ± (15+0,03DN) |
| 45º (1/8) Bends | 80-2000 | ± (10+0,25DN) |
| 22º 30´ (1/16) Bends | 80-1200 | ± (10+0,2DN) |
| 11º 15´ (1/32) Bends | 1400-2000 | ± (10+0,25DN) |







| Limit Deviations On Lengths | | |
|---|---|---|
| **Type of Fittings** | **DN (mm)** | **Deviation (mm)** |
| Fittings for Socketed Joints | 80-1200 | ± 25 |
| Pipe & Fittings for Flange Joints | 80-2000 | ± 10 |







# TECHNICAL SPECIFICATION OF DUCTILE IRON PIPE FITTINGS

## WALL THICKNESS

- The minimum wall thickness of fittings is 7mm, limit deviation is -2,3mm
- The nominal wall thickness e=K(0,5+0,001DN), limit deviation is -(2,3+0,001DN)mm
- The nominal wall thickness of different size fittings are listed in below table: in mm

| DN | 80 | 100 | 150 | 200 | 250 | 300 | 350 | 400 | 450 | 500 | 600 | 700 | 800 | 900 | 1000 | 1100 | 1200 | 1400 | 1600 | 1800 | 2000 |
|---|---|---|---|---|---|---|---|---|---|---|---|---|---|---|---|---|---|---|---|---|---|
| K9 | 6,0 | 6,1 | 6,3 | 6,4 | 6,8 | 7,2 | 7,7 | 8,1 | 8,6 | 9,0 | 9,9 | 10,8 | 11,7 | 12,6 | 13,5 | 14,4 | 15,3 | 17,1 | 18,9 | 20,7 | 22,5 |
| K12 | 7,0 | 7, 1 | 7,8 | 8,4 | 9,0 | 9,6 | 10,2 | 10,8 | 11,4 | 12,0 | 13,2 | 14,4 | 15,6 | 16,8 | 18,0 | 19,2 | 20,4 | 22,8 | 25,2 | 27,6 | 30,0 |
| K 14 | 8,1 | 8,2 | 9,1 | 9,8 | 10,5 | 11,2 | 11,9 | 12,6 | 13,3 | 14,0 | 15,4 | 16,8 | 18,2 | 19,6 | 21,0 | 22,4 | 23,8 | 26,6 | 29,4 | 32,2 | 35,0 |
| Tolerance | -2,3 | -2,4 | -2,5 | -2,5 | -2,6 | -2,6 | -2,7 | -2,7 | -2,8 | -2,8 | -2,9 | -3,0 | -3, 1 | -3,2 | -3,3 | -3,4 | -3,5 | -3,7 | -3,9 | -4, 1 | -4,3 |

Note: The lower limit only is given, so as to ensure sufficient resistance to internal pressure

## PRESSURE TEST

- The pressure test shall be carried out on all fittings before the application of their external and internal coatings, except for the metallic zinc coating of pipes which may be applied before the test. No leakage or sweating should be detected during test.

| DN (mm) | Mininmum Works Test Pressure (bar) |
|---|---|
| 80-300 | 25 |
| 350-600 | 16 |
| 700-1600 | 10 |

Not: The works hydrostatic test pressure is less for fittings than for pipes because the shape of the fittings makes it difficult to provide sufficient restraint to high internal pressure the test.





# TECHNICAL SPECIFICATION OF DUCTILE IRON PIPE FITTINGS

## LINING

- Fitting arre supplied with manually applied cement mortar lining, the mortar of the lining is composed of cement, sand and water. The mortar contains by mass minimum one part of cement to 3,5 parts of sand.
- The nominal thickness of the lining and the minimum permissible values are given the table below.

| DN (mm) | Nominal Lining Thickness (mm) | Minimum at One Point (mm) |
|---|---|---|
| ≤300 | 4 | 2,5 |
| 350-600 | 5 | 3 |
| 700-1200 | 6 | 3,5 |
| 1400-2000 | 9 | 6 |

Note: The surface of the cement mortar lining shall be uniform and smooth. Trowel marks, protrusion of sand grains and surface etexture inherent to the method of manufacture are acceptale. Stroge of fittings in hot, dry environment can cause metal expansion and mortar shirinkage which can result in dry lining developing areas of disbondment and shrinkage cracks exceeding the above given width. When the lining is re-exposed to water, it will swell by absorption of moisture and cracks qill close to conform to above table and will eventually heal by autogenous process.

## COATING

- A layer of zinc-rich coating+bitumen shall be uniformly covered the whole surface of the casting and have a smooth regular appearance.
- The mean mass of zinc rich painting shall not be less than 200g/m², the mean thickness of the coating shall be not less than 70 μ m and the local minimum thickness shall be not less than 50 μ m.





# STANDARD

| 1. Mechanical Properties | | | | |
|---|---|---|---|---|
| Nominal Size DN | Minimum Tensile Strength, RM Mpa | Minimum 0,2% proof stress, Rp0,2 Mpa | Minimum Elongation After Fracture, A% | Hardness HB |
| 80-1000 | ≥420 | ≥300 | ≥10 | ≥230 |
| <<1100-2600 | | | ≥7 | |

Note:
1. By agreement between manufacture and purchaser, the 0,2% proff stress (Rp0,2) may be measred. It shall be not less than.

- 270 Mpa when A≥12% for DN 40 to DN 1000 or A≥10% for DN >1000;
- 300 Mpa in other cases

2. DN 40 to DN1000, the minimum elongation after fracture shall be 7% for thickness classes over K12.

| 2. Works Test Pressure | |
|---|---|
| Nominal Size DN | Hydrostatic Works Test Pressure Bar |
| 80 - 300 | 50 |
| 350 - 600 | 40 |
| 700 -1000 | 32 |
| 1200 - 2000 | 25 |
| 2200 -2600 | 18 |

| 3. Thickness of Cement Lining | | | |
|---|---|---|---|
| DN | Nominal Value | Tolerance | Maximum Crack Width and Radial Displacement |
| 80 - 300 | 4 | -1,5 | 0,4 |
| 350 - 600 | 5 | -2 | 0,5 |
| 700 -1000 | 6 | -2,5 | 0,6 |
| 1400 - 2000 | 9 | -3 | 0,8 |

1. A negative tolerance only is given.

Note: Pipe end may have a chamfer of maximum lenght 50 mm.

# STANDARD

## 4. METALLIK ZINC COATING

- When metallic cinc spray is applied, the mean mass of the zinc per unit area shall be not less than 130 g/m with a local minimum of 110 g/m. The mass of the zinc according to customer`s request is also available.

## 5. BITUMEN COATING

- The mean thickness of bitumen coating shall be not les than 70 µm and local minimum thickness shall be not less than 50 µm. The thickness of bitumen coating according to the customer`s request is also available.

The ductile iron pipes are manufactured according to ISO 2531(Ductile iron pipes, fittings and accessories for pressure pipelines); EN545 (Ductile iron pipes, fittings and accessories and their joints for sewerage applications);

Cement mortar lining are applied according to ISO 4179 (Ductile iron pipes for presure and non-pressure pipelines Centrifugal cement mortar lining General requirements); Zinc coating are applied according to ISO 8179-1 (Ductile iron pipes-External coating-Part 1: Metallic zinc with finishing layer).

## 6. ALTERNATIVE COATING

- a) External coatings:
  - Metallic zinc with finishing layer, in accordance with ISO 8179-1;
  - Zinc rich paint with finishing layer, in accordance with ISO 8179-2;
  - Epoxy coating, in accordance with EN 14901;
  - Polyethylene sleeve, in accordance with ISO 8180;
  - Alloy of zinc and aluminum with or without other metals, having a minimum mass of 400 g/m2, with finising layer;
  - Extruded polyethylene coating in accordance with EN 14628;
  - Polyurethane coating in accordance with EN 15189;
  - Cement mortar coating in accordance with EN 15542;
  - Adhesive tape;

  b) Internal coating (linings):
  - Portland/Blast furnace slag/sluphate/high aluminum cement mortar, in accordance with ISO 4179;
  - Cement mortar lining with seal coat, in accordance with ISO 16132;
  - Epoxy coating, in accordance with EN 14901;
  - Polyurethane lining in accordance eith EN 15655;

  c) Coating of the joint area:
  - Epoxy coating;
  - Polyurethane coating.

# T TYPE PUSH-IN JOINT SOCKET AND SPIGOT PIPE K7-K14



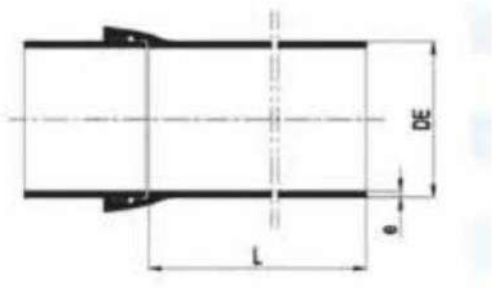


| T Type Push-in Joint Socket and Spigot Pipe K7-K14 | | | | | | | |
|---|---|---|---|---|---|---|---|
| DN | DE | Iron Wall Thickness e | | | | | |
| | | K7 | K8 | K9 | K10 | K12 | K14 |
| 80 | 98 | 6 | 6 | 6 | 6 | 7 | 8,1 |
| 100 | 118 | 6 | 6 | 6 | 6 | 7,2 | 8,4 |
| 125 | 144 | 6 | 6 | 6 | 6,3 | 7,5 | 8,8 |
| 150 | 170 | 6 | 6 | 6 | 6,5 | 7,8 | 9,1 |
| 200 | 222 | 6 | 6 | 6,3 | 7 | 8,4 | 9,8 |
| 250 | 274 | 6 | 6 | 6,8 | 7,5 | 9 | 10,5 |
| 300 | 326 | 6 | 6,4 | 7,2 | 8 | 9,6 | 11,2 |
| 350 | 378 | 6 | 6,8 | 7,7 | 8,5 | 10,2 | 11,9 |
| 400 | 429 | 6,3 | 7,2 | 8,1 | 9 | 10,8 | 12,6 |
| 450 | 480 | 6,7 | 7,6 | 8,6 | 9,5 | 11,4 | 13,3 |
| 500 | 532 | 7 | 8 | 9 | 10 | 12 | 14 |
| 600 | 635 | 7,7 | 8,8 | 9,9 | 11 | 13,2 | 15,4 |
| 700 | 738 | / | 9,6 | 10,8 | 12 | 14,4 | 16,8 |
| 800 | 842 | / | 10,4 | 11,7 | 13 | 15,6 | 18,2 |
| 900 | 945 | / | 11,2 | 12,6 | 14 | 16,8 | 19,6 |
| 1000 | 1048 | / | 12 | 13,5 | 15 | 18 | 21 |
| 1100 | 1152 | / | / | 14,4 | 16 | 19,2 | 22,4 |
| 1200 | 1255 | / | / | 15,3 | 17 | 20,4 | 23,8 |
| 1400 | 1255 | / | / | 17,1 | 19 | 22,8 | 26,6 |
| 1500 | 1565 | / | / | 18 | 20 | 24 | 28 |
| 1600 | 1668 | / | / | 18,9 | 21 | 25,2 | 29,4 |
| 1800 | 1875 | / | / | 20,7 | 23 | 27,6 | 32,2 |
| 2000 | 2282 | / | / | 22,5 | 25 | 30 | 35 |
| 2200 | 2288 | / | / | 24,3 | 27 | 32,4 | 37,8 |
| 2400 | 2495 | / | / | 26,1 | 29 | 34,8 | 40,6 |
| 2600 | 2702 | / | / | 27,9 | 31 | 37,2 | 43,4 |

# T TYPE PUSH-IN JOINT SOCKET AND SPIGOT PIPE CLASS 20-100



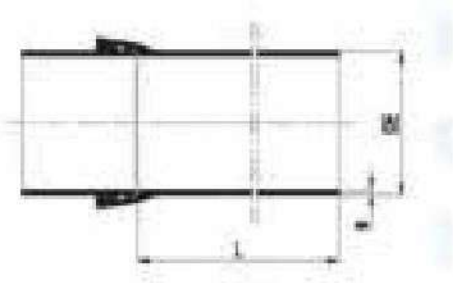

| T Type Push-in Joint Socket and Spigot Pipe Class 20-100 | | | | | | | | | |
|---|---|---|---|---|---|---|---|---|---|
| DN | DE | | Iron Wall Thickness e | | | | | | |
| | Nominal | Limit Deviations | Class20 | Class25 | Class30 | Class40 | Class50 | Class54 | Class100 |
| 40 | 56 | +1/-1,2 | / | / | / | 3,0 | 3,5 | 4,0 | 4,7 |
| 50 | 66 | +1/-1,2 | / | / | / | 3,0 | 3,5 | 4,0 | 4,7 |
| 60 | 77 | +1/-1,2 | / | / | / | 3,0 | 3,5 | 4,0 | 4,7 |
| 65 | 82 | +1/-1,2 | / | / | / | 3,0 | 3,5 | 4,0 | 4,7 |
| 80 | 98 | +1/-2,7 | / | / | / | 3,0 | 3,5 | 4,0 | 4,7 |
| 100 | 118 | +1/-2,8 | / | / | / | 3,0 | 3,5 | 4,0 | 4,7 |
| 125 | 144 | +1/-2,8 | / | / | / | 3,0 | 3,5 | 4,0 | 5,0 |
| 150 | 170 | +1/-2,9 | / | / | / | 3,0 | 3,5 | 4,0 | 5,9 |
| 200 | 222 | +1/-3,0 | / | / | / | 3,1 | 3,9 | 5,0 | 7,7 |
| 250 | 274 | +1/-3,1 | / | / | / | 3,9 | 4,8 | 6,1 | 9,5 |
| 300 | 326 | +1/-3,3 | / | / | / | 4,6 | 5,7 | 7,3 | 11,2 |
| 350 | 378 | +1/-3,4 | / | / | 4,7 | 5,3 | 6,6 | 8,5 | 13,0 |
| 400 | 429 | +1/-3,5 | / | / | 4,8 | 6,0 | 7,5 | 9,6 | 14,8 |
| 450 | 480 | +1/-3,6 | / | / | 5,1 | 6,8 | 8,4 | 10,7 | 16,6 |
| 500 | 532 | +1/-3,8 | / | / | 5,6 | 7,5 | 9,3 | 11,9 | 18,3 |
| 600 | 635 | +1/-4,0 | / | / | 6,7 | 8,9 | 11,1 | 14,2 | 21,9 |
| 700 | 738 | +1/-4,3 | / | 6,8 | 7,8 | 10,4 | 13,0 | 16,5 | / |
| 800 | 842 | +1/-4,5 | / | 7,5 | 8,9 | 11,9 | 14,8 | 18,8 | / |
| 900 | 945 | +1/-4,8 | / | 8,4 | 10,0 | 13,3 | 16,6 | / | / |
| 1000 | 1048 | +1/-5,0 | / | 9,3 | 11,1 | 14,8 | 18,4 | / | / |
| 1100 | 1152 | +1/-6,0 | 8,2 | 10,2 | 12,2 | 16,2 | 20,2 | / | / |
| 1200 | 1255 | +1/-5,8 | 8,9 | 11,1 | 13,3 | 17,7 | 22,0 | / | / |
| 1400 | 1462 | +1/-6,6 | 10,4 | 12,9 | 15,5 | / | / | / | / |
| 1500 | 1565 | +1/-7,0 | 11,1 | 13,9 | 16,6 | / | / | / | / |
| 1600 | 1668 | +1/-7,4 | 11,9 | 14,8 | 17,7 | / | / | / | / |
| 1800 | 1875 | +1/-8,2 | 13,3 | 16,6 | 19,9 | / | / | / | / |
| 2000 | 2082 | +1/-9,0 | 14,8 | 18,4 | 22,1 | / | / | / | / |

# FLANGE PIPE WITH CAST-ON OR SCREWED-ON OR WELD-ON FLANGE



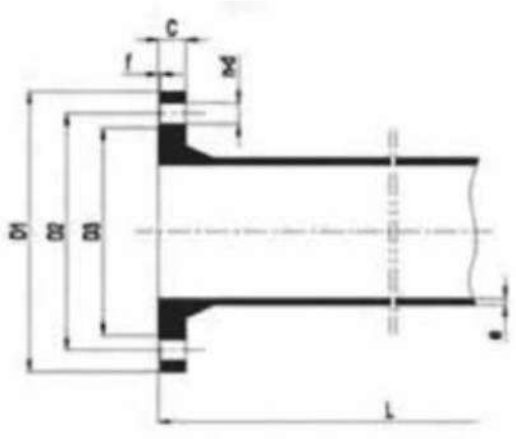


| T Type Push-in Joint Socket and Spigot Pipe K7-K14 | | | |
|---|---|---|---|
| DN | Iron Wall Thickness e | | |
| | K9 | K12 | K14 |
| 80 | 6 | 7 | 8,1 |
| 100 | 6 | 7,2 | 8,4 |
| 125 | 6 | 7,5 | 8,8 |
| 150 | 6 | 7,8 | 9,1 |
| 200 | 6,3 | 8,4 | 9,8 |
| 250 | 6,8 | 9 | 10,5 |
| 300 | 7,2 | 9,6 | 11,2 |
| 350 | 7,7 | 10,2 | 11,9 |
| 400 | 8,1 | 10,8 | 12,6 |
| 450 | 8,6 | 11,4 | 13,3 |
| 500 | 9 | 12 | 14 |
| 600 | 9,9 | 13,2 | 15,4 |
| 700 | 10,8 | 14,4 | 16,8 |
| 800 | 11,7 | 15,6 | 18,2 |
| 900 | 12,6 | 16,8 | 19,6 |
| 1000 | 13,5 | 18 | 21 |
| 1100 | 14,4 | 19,2 | 22,4 |
| 1200 | 15,3 | 20,4 | 23,8 |
| 1400 | 17,1 | 22,8 | 26,6 |
| 1500 | 18 | 24 | 28 |
| 1600 | 18,9 | 25,2 | 29,4 |
| 1800 | 20,7 | 27,6 | 32,2 |
| 2000 | 22,5 | 30 | 35 |
| 2001 | / | 31,2 | 36,4 |
| 2200 | 24,3 | 32,4 | 37,8 |
| 2400 | 26,1 | 34,8 | 40,6 |
| 2600 | 27,9 | 37,2 | 43,4 |

# FLANGE PIPE WITH CAST-ON OR SCREWED-ON OR WELD-ON FLANGE

| Dimensions for All Types | | DN | | | | |
|---|---|---|---|---|---|---|
| | | DN50~100 | DN125~300 | DN350~600 | DN700~1200 | DN1400~2000 |
| Symbol | Designation | Suggested Tolorances | | | | |
| D1 | Outside Daimeter | Not specified but the minimum shall provide a sufficent bearing area for standard hexagonal bolt | | | | |
| d3 | Facing Diameter | +4,5 | +5,5 | +6,5 | +8,5 | +10 |
| | | -4 | -4,5 | -5 | -5,5 | -6 |
| f1 | Facing Height | **Height** | | | | |
| | | **2** | **3** | 4 | 5 | 6 |
| | | Tolerances | | | | |
| | | +1 | +1,5 | +2 | +2,5 | +3 |
| | | -1 | -2 | -3 | -4 | -5 |
| b1 | Flange Thickness at Edge | **Thickness** | | | | |
| | | <25 | 26 to 40 | 41 to 55 | 56 to 70 | >71 |
| | | Tolerances | | | | |
| | | ±4 | ±4,5 | ±5 | ±6 | ±7 |
| L2 | Diameterof Bolt Holes | **Diameterof Bolt Holes** | | | | |
| | | <20 | | | >22 | |
| | | Tolerances | | | | |
| | | ±0,5 | | | +1 | |
| | | 0 | | | 0 | |
| D2 | Diameter of Bole Circle | **Diameter of Bolt Circle for Bolt Size** | | | | |
| | | M10 | M12 to M24 | M27 to M45 | M52 | >M56 |
| | | Tolerances | | | | |
| | | ±1 | ±1,5 | ±2 | ±3 | ±3,5 |
| - | Centra to Centre of Adjacent Bolt Holes | **Diameter of Bolt Circle for Bolt Size** | | | | |
| | | M10 | M12 to M24 | M27 to M45 | M52 | >M56 |
| | | Tolerances | | | | |
| | | ±0,5 | ±0,75 | ±1 | ±1,5 | ±1,75 |
| - | Parallelism of Bolting Surface with Joint Surfeca | $2^0$ max | | | | |

# FLANGE SOCKET/ SPIGOT



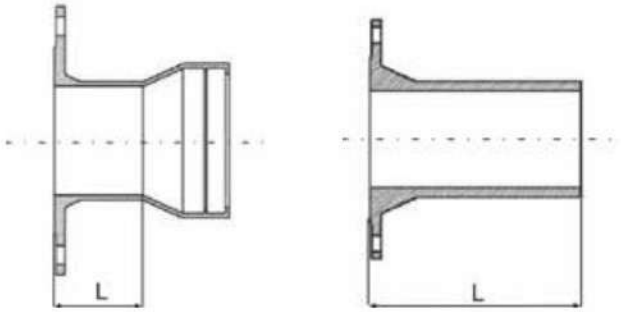


| Flange Socket | | | | | | | | Flange Spigot | | | | |
|---|---|---|---|---|---|---|---|---|---|---|---|---|
| DN | L | T-type Mass (kg) | | | K-type Mass (kg) | | | DN | L | Mass (kg) | | |
| | | PN10 | PN16 | PN25 | PN10 | PN16 | PN25 | | | PN10 | PN16 | PN25 |
| 80 | 130 | 7,4 | 7,4 | 7,4 | 9,6 | 9,6 | 9,6 | 80 | 350 | 7,8 | 7,8 | 7,8 |
| 100 | 130 | 9 | 9 | 9,5 | 11,4 | 11,4 | 12,4 | 100 | 360 | 9,6 | 9,6 | 10,2 |
| 150 | 135 | 14,2 | 14,5 | 15,2 | 16,7 | 16,7 | 17,7 | 150 | 380 | 15,6 | 15,6 | 16,6 |
| 200 | 140 | 20,5 | 20 | 22 | 22,7 | 22,2 | 24,2 | 200 | 400 | 22,5 | 22,5 | 24,5 |
| 250 | 145 | 28 | 27,5 | 31,5 | 29,4 | 28,9 | 32,9 | 250 | 420 | 32 | 31,5 | 35,5 |
| 300 | 150 | 37 | 36,5 | 42 | 42,4 | 41,9 | 47,4 | 300 | 440 | 43 | 42,5 | 47,5 |
| 350 | 155 | 45 | 48 | 56 | 50,4 | 53,4 | 61,2 | 350 | 460 | 52 | 55 | 64 |
| 400 | 160 | 55 | 60 | 71 | 60,2 | 65,2 | 76,2 | 400 | 480 | 64 | 70 | 81 |
| 450 | 165 | 66,5 | 76,5 | 87,5 | 70,6 | 80,6 | 91,9 | 450 | 500 | 79 | 88 | 103 |
| 500 | 170 | 78 | 93 | 104 | 80,9 | 85,9 | 94,9 | 500 | 520 | 94 | 109 | 121 |
| 600 | 180 | 108 | 135 | 149 | 106 | 133 | 147 | 600 | 560 | 133 | 159 | 173 |
| 700 | 190 | 144 | 159 | 216 | 161 | 176 | 211 | 700 | 600 | 179 | 194 | 228 |
| 800 | 200 | 189 | 208 | 287 | 206 | 225 | 274 | 800 | 600 | 226 | 245 | 294 |
| 900 | 210 | 235 | 258 | 356 | 257 | 281 | 341 | 900 | 600 | 272 | 295 | 356 |
| 1000 | 220 | 293 | 324 | 458 | 293 | 324 | 458 | 1000 | 600 | 328 | 369 | 447 |
| 1200 | 240 | 456 | 521 | 664 | 456 | 521 | 664 | 1200 | 600 | 456 | 520 | 620 |
| 1400 | 310 | 759 | 820 | 960 | 654 | 723 | 885 | 1400 | 710 | 664 | 732 | 884 |
| 1600 | 330 | 1185 | 1278 | 1438 | 897 | 999 | 1176 | 1600 | 780 | 922 | 1024 | 1202 |
| 1800 | 350 | 1308 | 1421 | 1638 | 1137 | 1263 | 1503 | 1800 | 850 | 1196 | 1322 | 1562 |
| 2000 | 370 | / | / | / | 1428 | 1581 | 1933 | 2000 | 920 | 1534 | 1687 | 2040 |

# DOUBLE SOCKET BEND 90°/45°/22,5°/11,25°



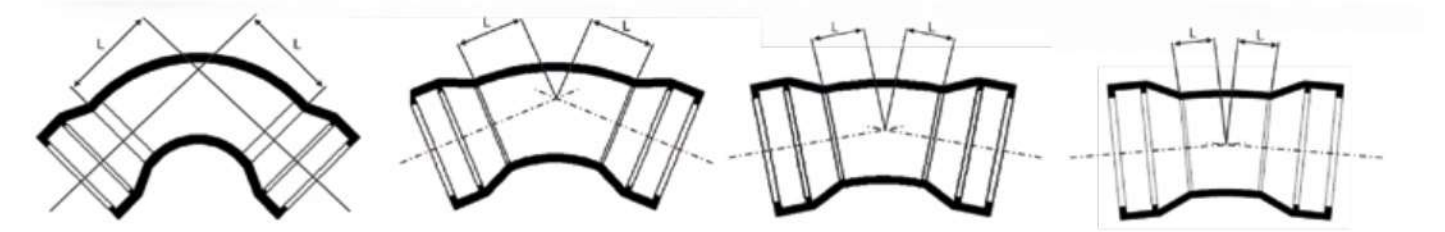

| Double Socket Bend 90° | | | |
|---|---|---|---|
| DN | L | Mass (kg) | |
| | | T-type | K-Type |
| 80 | 100 | 8,6 | 11,1 |
| 100 | 120 | 11,4 | 15,2 |
| 150 | 170 | 20,5 | 25,5 |
| 200 | 220 | 33,0 | 37,4 |
| 250 | 270 | 48,5 | 51,3 |
| 300 | 320 | 68,0 | 78,8 |
| 350 | 370 | 98,4 | 109 |
| 400 | 420 | 129 | 139 |
| 450 | 470 | 163 | 172 |
| 500 | 520 | 204 | 210 |
| 600 | 620 | 303 | 300 |
| 700 | 720 | 436 | 428 |
| 800 | 820 | 595 | 572 |
| 900 | 920 | 793 | 778 |
| 1000 | 1020 | 986 | 986 |
| 1200 | 1220 | 1624 | 1624 |
| 1400 | 1220 | 2419 | 2419 |
| 1600 | 1290 | 3444 | 3014 |
| 1800 | 1320 | 4283 | 3833 |
| 2000 | / | / | / |

| Double Socket Bend 45° | | | |
|---|---|---|---|
| DN | L | Mass (kg) | |
| | | T-type | K-Type |
| 80 | 55 | 7,7 | 10,3 |
| 100 | 65 | 10,1 | 14,9 |
| 150 | 85 | 17,4 | 22,5 |
| 200 | 110 | 27 | 31,4 |
| 250 | 180 | 38,5 | 41,3 |
| 300 | 150 | 53 | 63,8 |
| 350 | 170 | 70 | 80,4 |
| 400 | 195 | 89 | 99,4 |
| 450 | 220 | 123 | 132 |
| 500 | 240 | 129 | 145 |
| 600 | 285 | 02 | 198 |
| 700 | 330 | 282 | 302 |
| 800 | 370 | 378 | 395 |
| 900 | 415 | 496 | 539 |
| 1000 | 460 | 635 | 710 |
| 1200 | 550 | 986 | 1109 |
| 1400 | 515 | 1509 | 1273 |
| 1600 | 565 | 2117 | 1740 |
| 1800 | 610 | 2615 | 2296 |
| 2000 | 660 | / | 2970 |

| Double Socket Bend 22,5° | | | |
|---|---|---|---|
| DN | L | Mass (kg) | |
| | | T-type | K-Type |
| 80 | 40 | 7,3 | 9,9 |
| 100 | 40 | 9,3 | 14,1 |
| 150 | 55 | 15,9 | 21 |
| 200 | 65 | 24 | 28,4 |
| 250 | 75 | 33,5 | 36,3 |
| 300 | 85 | 44,5 | 55,3 |
| 350 | 95 | 58 | 68,4 |
| 400 | 110 | 74 | 84,4 |
| 450 | 120 | 102 | 110 |
| 500 | 130 | 111 | 117 |
| 600 | 150 | 157 | 154 |
| 700 | 175 | 217 | 240 |
| 800 | 195 | 287 | 308 |
| 900 | 220 | 373 | 417 |
| 1000 | 240 | 470 | 550 |
| 1200 | 285 | 851 | 689 |
| 1400 | 260 | 1241 | 857 |
| 1600 | 280 | 1628 | 1198 |
| 1800 | 305 | 2037 | 1588 |
| 2000 | 330 | / | 2144 |

| Double Socket Bend 11,25° | | | |
|---|---|---|---|
| DN | L | Mass (kg) | |
| | | T-type | K-Type |
| 80 | 30 | 7,1 | 9,6 |
| 100 | 30 | 8,9 | 13,7 |
| 150 | 35 | 14,8 | 17,3 |
| 200 | 40 | 22 | 26,4 |
| 250 | 50 | 30,5 | 33,3 |
| 300 | 55 | 40,5 | 51,3 |
| 350 | 60 | 52 | 62,4 |
| 400 | 65 | 65 | 75,4 |
| 450 | 70 | 91,9 | 100 |
| 500 | 75 | 96 | 102 |
| 600 | 85 | 134 | 130 |
| 700 | 95 | 181 | 208 |
| 800 | 110 | 239 | 263 |
| 900 | 120 | 305 | 359 |
| 1000 | 130 | 381 | 473 |
| 1200 | 150 | 724 | 541 |
| 1400 | 130 | 1047 | 672 |
| 1600 | 140 | 1376 | 1007 |
| 1800 | 155 | 1704 | 1331 |
| 2000 | 165 | / | 1702 |

# ALL SOCKET TEE



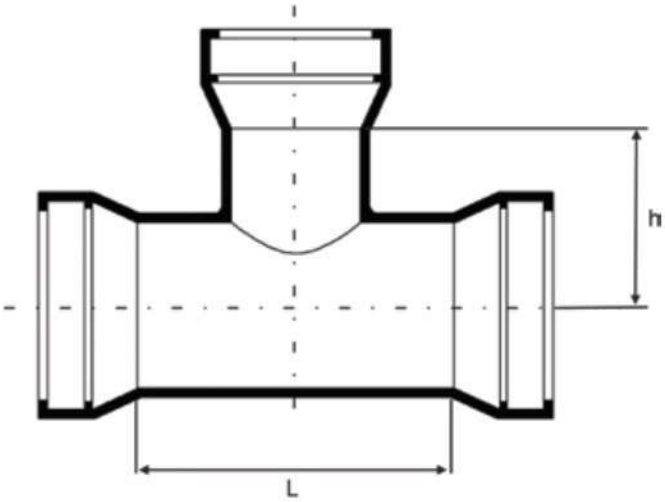


| All Socket Tee | | | | | |
|---|---|---|---|---|---|
| Body | Banch | L | h | Mass (kg) | |
| DN | dn | | | T-type | K-type |
| 80 | 80 | 170 | 85 | 12,4 | 17,7 |
| 100 | 80 | 170 | 95 | 14,8 | 21,5 |
| | 100 | 190 | 95 | 16,1 | 23,2 |
| 150 | 80 | 170 | 120 | 21,5 | 29,2 |
| | 100 | 195 | 120 | 23,5 | 31 |
| | 150 | 255 | 125 | 28 | 35,6 |
| 200 | 80 | 175 | 145 | 30 | 37,9 |
| | 100 | 200 | 145 | 32 | 38,8 |
| | 150 | 225 | 150 | 37 | 44 |
| | 200 | 315 | 155 | 43 | 49,6 |
| 250 | 80 | 175 | 165 | 40 | 48,3 |
| | 100 | 200 | 165 | 42,7 | 47,9 |
| | 150 | 260 | 175 | 51,1 | 56,4 |
| | 200 | 315 | 180 | 55,9 | 60,9 |
| | 250 | 375 | 185 | 63,2 | 67,4 |
| 300 | 80 | 180 | 190 | 51,5 | / |
| | 100 | 200 | 195 | 54,2 | 67,4 |
| | 150 | 260 | 200 | 64,3 | 77,6 |
| | 200 | 320 | 205 | 69,9 | 82,9 |
| | 250 | 375 | 210 | 79,9 | 92,1 |
| | 300 | 435 | 215 | 86,2 | 102 |
| 350 | 80 | 180 | 215 | 63,6 | / |
| | 100 | 208 | 220 | 67,2 | 80 |
| | 150 | 265 | 225 | 79,6 | 92,6 |
| | 200 | 320 | 230 | 84,9 | 97,5 |
| | 250 | 380 | 235 | 96,9 | 109 |
| | 300 | 435 | 240 | 106 | 122 |
| | 350 | 495 | 245 | 415 | 131 |
| 400 | 80 | 185 | 240 | 76,1 | / |
| | 100 | 210 | 245 | 82,2 | 95 |
| | 150 | 265 | 240 | 96,7 | 110 |
| | 200 | 325 | 255 | 102 | 115 |
| | 250 | 320 | 260 | 116 | 128 |
| | 300 | 449 | 265 | 126 | 142 |
| | 350 | 500 | 270 | 137 | 152 |
| | 400 | 555 | 275 | 150 | 166 |

# ALL SOCKET TEE

| Body | Banch | L | h | Mass (kg) | |
|---|---|---|---|---|---|
| DN | dn | | | T-type | K-type |
| 450 | 80 | 185 | 265 | 101 | / |
| | 100 | 210 | 270 | 106 | 116 |
| | 150 | 270 | 275 | 116 | 126 |
| | 200 | 325 | 280 | 127 | 137 |
| | 250 | 385 | 285 | 138 | 147 |
| | 300 | 445 | 290 | 149 | 163 |
| | 350 | 500 | 295 | 161 | 175 |
| | 400 | 560 | 300 | 173 | 186 |
| | 450 | 615 | 305 | 186 | 198 |
| 500 | 80 | 190 | 290 | 110 | / |
| | 100 | 215 | 295 | 115 | 123 |
| | 150 | 270 | 300 | 137 | 145 |
| | 200 | 330 | 305 | 141 | 149 |
| | 250 | 390 | 310 | 161 | 168 |
| | 300 | 445 | 315 | 174 | 185 |
| | 350 | 505 | 320 | 187 | 198 |
| | 400 | 560 | 325 | 199 | 210 |
| | 450 | 620 | 330 | 214 | 224 |
| | 500 | 680 | 340 | 234 | 242 |
| 600 | 80 | 195 | 340 | 165 | / |
| | 100 | 220 | 345 | 169 | 168 |
| | 150 | 280 | 350 | 185 | 184 |
| | 200 | 335 | 355 | 188 | 187 |
| | 250 | 395 | 360 | 215 | 213 |
| | 300 | 450 | 365 | 231 | 233 |
| | 350 | 510 | 370 | 246 | 248 |
| | 400 | 570 | 375 | 258 | 260 |
| | 450 | 625 | 380 | 280 | 281 |
| | 500 | 685 | 390 | 296 | 296 |
| | 550 | 800 | 400 | 343 | 338 |
| 700 | 80 | 205 | 395 | 217 | 207 |
| | 100 | 230 | 395 | 224 | 215 |
| | 150 | 285 | 400 | 241 | 232 |
| | 200 | 345 | 405 | 259 | 250 |
| | 250 | 400 | 410 | 277 | 267 |
| | 300 | 460 | 420 | 297 | 290 |
| | 350 | 520 | 425 | 317 | 310 |
| | 400 | 575 | 430 | 337 | 329 |
| | 450 | 635 | 435 | 361 | 350 |
| | 500 | 690 | 440 | 380 | 370 |
| | 600 | 810 | 450 | 430 | 416 |
| | 700 | 925 | 460 | 486 | 470 |

| Body | Banch | L | h | Mass (kg) | |
|---|---|---|---|---|---|
| DN | dn | | | T-type | K-type |
| 800 | 80 | 210 | 445 | 278 | 254 |
| | 100 | 235 | 445 | 287 | 264 |
| | 150 | 290 | 450 | 307 | 284 |
| | 200 | 350 | 455 | 330 | 305 |
| | 250 | 410 | 460 | 352 | 328 |
| | 300 | 465 | 470 | 374 | 353 |
| | 350 | 525 | 475 | 398 | 376 |
| | 400 | 580 | 4480 | 420 | 398 |
| | 450 | 640 | 485 | 448 | 422 |
| | 500 | 700 | 490 | 472 | 447 |
| | 600 | 815 | 500 | 526 | 497 |
| | 700 | 930 | 510 | 586 | 558 |
| | 800 | 1045 | 525 | 655 | 618 |
| 9000 | 80 | 215 | 495 | 349 | 322 |
| | 100 | 240 | 495 | 360 | 333 |
| | 150 | 300 | 500 | 386 | 359 |
| | 200 | 355 | 505 | 410 | 382 |
| | 250 | 415 | 510 | 437 | 408 |
| | 300 | 470 | 515 | 462 | 438 |
| | 350 | 530 | 525 | 490 | 464 |
| | 400 | 590 | 530 | 518 | 491 |
| | 450 | 645 | 535 | 547 | 518 |
| | 500 | 705 | 540 | 574 | 546 |
| | 600 | 820 | 550 | 635 | 602 |
| | 700 | 935 | 560 | 700 | 667 |
| | 800 | 1050 | 570 | 774 | 733 |
| | 900 | 1170 | 585 | 858 | 815 |
| 1000 | 80 | 225 | 545 | 433 | 434 |
| | 100 | 245 | 545 | 443 | 445 |
| | 150 | 305 | 550 | 474 | 475 |
| | 200 | 360 | 555 | 502 | 503 |
| | 250 | 420 | 560 | 533 | 533 |
| | 300 | 480 | 510 | 564 | 568 |
| | 350 | 535 | 575 | 594 | 597 |
| | 400 | 595 | 580 | 626 | 628 |
| | 450 | 650 | 585 | 659 | 658 |
| | 500 | 110 | 590 | 690 | 690 |
| | 600 | 825 | 600 | 758 | 154 |
| | 100 | 94() | 610 | 831 | 825 |
| | 800 | 1060 | 625 | 913 | 901 |
| | 900 | 1115 | 635 | 1000 | 985 |
| | 1000 | 1290 | 645 | 1096 | 1096 |

# ALL SOCKET TEE

| Body | Banch | L | h | Mass (kg) | |
|---|---|---|---|---|---|
| DN | dn | | | T-type | K-type |
| 1200 | 80 | 235 | 645 | 631 | 632 |
| | 100 | 200 | 645 | 648 | 649 |
| | 150 | 315 | 650 | 685 | 686 |
| | 200 | 375 | 655 | 725 | 726 |
| | 250 | 430 | 660 | 166 | 166 |
| | 300 | 490 | 610 | 816 | 819 |
| | 350 | 550 | 615 | 845 | 849 |
| | 400 | 605 | 680 | 884 | 886 |
| | 450 | 665 | 685 | 929 | 928 |
| | 500 | 720 | 690 | 966 | 966 |
| | 600 | 840 | 100 | 1054 | 1050 |
| | 100 | 955 | 110 | 1143 | 1138 |
| | 800 | 1010 | 125 | 1239 | 1226 |
| | 900 | 1185 | 736 | 1339 | 1325 |
| | 1000 | 1300 | 145 | 1441 | 1441 |
| | 1200 | 1535 | 165 | 1691 | 1691 |
| 1400 | 80 | 250 | 145 | 988,5 | 698 |
| | 100 | 270 | 145 | 1000 | 115,9 |
| | 150 | 330 | 150 | 1058 | 161,5 |
| | 200 | 385 | 755 | 1110 | 818,8 |
| | 250 | 445 | 160 | 1153 | 861,5 |
| | 300 | 500 | 110 | 1209 | 918,9 |
| | 350 | 560 | 775 | 1251 | 969,1 |
| | 400 | 620 | 780 | 1301 | 1021 |
| | 450 | 615 | 185 | 1351 | 1014 |
| | 500 | 735 | 790 | 1402 | 1117 |
| | 600 | 850 | 800 | 1501 | 1221 |
| | 100 | 965 | 810 | 1621 | 1330 |
| | 800 | 1080 | 825 | 1131 | 1431 |
| | 900 | 1200 | 835 | 1861 | 1550 |
| | 1000 | 1315 | 845 | 1984 | 1610 |
| | 1200 | 1545 | 865 | 2279 | 1930 |
| | 1400 | 1180 | 890 | 2648 | 2210 |

| Body | Banch | L | h | Mass (kg) | |
|---|---|---|---|---|---|
| DN | dn | | | T-type | K-type |
| 1600 | 80 | 260 | 845 | / | 1032 |
| | 100 | 280 | 845 | / | 1054 |
| | 150 | 340 | 850 | / | 1119 |
| | 200 | 400 | 855 | 1551 | 1122 |
| | 250 | 455 | 860 | 1616 | 1186 |
| | 300 | 515 | 810 | 1614 | 1246 |
| | 350 | 510 | 815 | / | 1311 |
| | 400 | 630 | 880 | 1191 | 1313 |
| | 450 | 690 | 885 | / | 1500 |
| | 500 | 145 | 890 | 1946 | 1523 |
| | 600 | 860 | 900 | 2044 | 1620 |
| | 100 | 980 | 910 | / | 1819 |
| | 800 | 1095 | 925 | 2318 | 1815 |
| | 900 | 1210 | 935 | / | 2086 |
| | 1000 | 1325 | 945 | 2618 | 2167 |
| | 1200 | 1560 | 965 | 2942 | 2456 |
| | 1400 | 1190 | 990 | 3341 | 2164 |
| | 1600 | 2020 | 1010 | 3800 | 3155 |
| 1800 | 80 | 270 | 945 | / | 1340 |
| | 100 | 295 | 945 | / | 1313 |
| | 150 | 350 | 950 | / | 1446 |
| | 200 | 410 | 955 | 1891 | 1449 |
| | 250 | 410 | 960 | 1980 | 1531 |
| | 300 | 525 | 910 | 2063 | 1680 |
| | 350 | 585 | 915 | / | 1759 |
| | 400 | 640 | 980 | 2208 | 1831 |
| | 450 | 700 | 985 | / | 1911 |
| | 500 | 760 | 990 | 2353 | 1989 |
| | 600 | 815 | 1000 | 2526 | 2139 |
| | 700 | 990 | 1010 | / | 2295 |
| | 800 | 1105 | 1025 | 2835 | 2313 |
| | 900 | 1220 | 1035 | / | 2612 |
| | 1000 | 1340 | 1045 | 3173 | 2703 |
| | 1200 | 1570 | 1065 | 3543 | 3037 |
| | 1400 | 1800 | 1090 | 3983 | 3387 |
| | 1600 | 2035 | 1110 | 4473 | 3809 |
| | 1800 | 2265 | 1135 | 4958 | 4285 |

# ALL SOCKET TEE

| Body | Banch | L | h | Mass (kg) | |
|---|---|---|---|---|---|
| DN | dn | | | T-type | K-type |
| 2000 | 80 | 280 | 1045 | / | 1710 |
| | 100 | 305 | 1045 | / | 1744 |
| | 150 | 365 | 1050 | / | 1838 |
| | 200 | 420 | 1055 | / | 1924 |
| | 250 | 480 | 1060 | / | 2020 |
| | 300 | 540 | 1070 | / | 2117 |
| | 350 | 600 | 1075 | / | 2204 |
| | 400 | 655 | 1080 | / | 2205 |
| | 450 | 710 | 1085 | / | 2386 |
| | 500 | 770 | 1090 | / | 2479 |
| | 600 | 885 | 1100 | / | 2660 |
| | 700 | 1000 | 1110 | / | 2845 |
| | 800 | 1120 | 1125 | / | 3035 |
| | 900 | 1235 | 1135 | / | 3226 |
| | 1000 | 1350 | 1145 | / | 3437 |
| | 1200 | 1580 | 1165 | / | 3846 |
| | 1400 | 1815 | 1190 | / | 4244 |
| | 1600 | 2045 | 1210 | / | 4695 |
| | 1800 | 2280 | 1235 | / | 5218 |
| | 2000 | 2510 | 1255 | / | 5787 |



# DOUBLE SOCKET TEE WITH FLANGED BRANCH



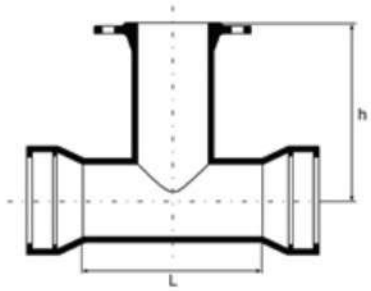


| Double Socket Tee With Flanged Branch | | | | | | | | | |
|---|---|---|---|---|---|---|---|---|---|
| Body | Banch | L | H | T-type | | | K-type | | |
| DN | dn | | | PN10 | PN16 | PN25 | PN10 | PN16 | PN25 |
| 80 | 80 | 170 | 160 | 13,5 | 13,5 | 13,5 | / | / | / |
| 100 | 80 | 170 | 175 | 15,8 | 15,8 | 15,8 | 20 | 20 | 20 |
| | 100 | 190 | 180 | 172 | 17,2 | 17,7 | 22 | 22 | 22 |
| 150 | 80 | 170 | 205 | 23 | 23 | 23 | 28 | 28 | 28 |
| | 100 | 195 | 210 | 24,5 | 24,5 | 25 | 29,5 | 29,5 | 29,5 |
| | 150 | 255 | 220 | 29,5 | 29,5 | 30,5 | 34,5 | 34,5 | 34,5 |
| 200 | 80 | 175 | 235 | 31,5 | 31,5 | 31,5 | 36 | 36 | 36 |
| | 100 | 200 | 240 | 33,5 | 33,5 | 34 | 38 | 38 | 38 |
| | 150 | 225 | 250 | 39 | 39 | 40 | 43,4 | 43,4 | 43,4 |
| | 200 | 315 | 260 | 45,6 | 46 | 47,5 | 50 | 50,4 | 52 |
| 250 | 80 | 175 | 265 | 44 | 44 | 44 | 46,6 | 45,5 | 45,6 |
| | 100 | 200 | 270 | 43,5 | 43,5 | 44 | 46 | 46 | 46,5 |
| | 150 | 260 | 280 | 56,6 | 56,6 | 57,6 | 59 | 59 | 60 |
| | 200 | 315 | 290 | 57 | 57 | 59 | 60 | 80 | 62 |
| | 250 | 375 | 300 | 85 | 66 | 69 | 67,6 | 68,6 | 71,6 |
| 300 | 100 | 200 | 300 | 55 | 55 | 56 | 66 | 66 | 67 |
| | 150 | 260 | 310 | 68 | 68 | 69 | 79 | 79 | 80 |
| | 200 | 320 | 320 | 71 | 70 | 73 | 82 | 80 | 84 |
| | 250 | 376 | 330 | 93 | 81 | 85 | 94 | 91 | 96 |
| | 300 | 435 | 340 | 89 | 91 | 95 | 100 | 102 | 106 |
| 350 | 100 | 205 | 330 | 68 | 68 | 68 | 78 | 78 | 78 |
| | 150 | 265 | 340 | 82,3 | 81,3 | 82,3 | 93 | 93 | 93 |
| | 200 | 320 | 350 | 86 | 86 | 88 | 96 | 96 | 96 |
| | 250 | 380 | 360 | 103 | 114 | 125 | 114 | 124 | 135 |
| | 300 | 435 | 379 | 111 | 118 | 129 | 122 | 128 | 139 |
| | 350 | 435 | 380 | 117 | 120 | 129 | 127 | 130 | 139 |
| 400 | 100 | 210 | 360 | 83 | 83 | 83 | 93 | 93 | 93 |
| | 150 | 265 | 370 | 98 | 98 | 98 | 108 | 108 | 108 |
| | 200 | 325 | 380 | 103 | 102 | 104 | 113 | 113 | 114 |
| | 250 | 380 | 390 | 119 | 118 | 122 | 127 | 128 | 132 |
| | 300 | 440 | 400 | 131 | 131 | 137 | 141 | 141 | 147 |
| | 350 | 500 | 410 | 143 | 146 | 153 | 153 | 156 | 163 |
| | 400 | 555 | 420 | 150 | 156 | 167 | 160 | 166 | 167 |
| 450 | 100 | 210 | 390 | 107 | 107 | 108 | 115 | 115 | 116 |
| | 150 | 270 | 400 | 119 | 119 | 120 | 127 | 127 | 128 |
| | 200 | 325 | 410 | 130 | 129 | 132 | 138 | 138 | 140 |
| | 250 | 385 | 420 | 141 | 140 | 144 | 149 | 149 | 153 |
| | 300 | 445 | 430 | 154 | 154 | 160 | 162 | 162 | 168 |
| | 350 | 500 | 440 | 166 | 169 | 178 | 174 | 177 | 186 |
| | 400 | 560 | 450 | 179 | 185 | 196 | 188 | 193 | 204 |
| | 450 | 615 | 460 | 191 | 200 | 216 | 200 | 209 | 224 |

# DOUBLE SOCKET TEE WITH FLANGED BRANCH

| Double Socket Tee With Flanged Branch | | | | | | | | | |
|---|---|---|---|---|---|---|---|---|---|
| Body | Banch | L | H | T-type | | | K-type | | |
| DN | dn | | | PN10 | PN16 | PN25 | PN10 | PN16 | PN25 |
| 500 | 100 | 215 | 420 | 116 | 116 | 117 | 122 | 122 | 122 |
| | 150 | 270 | 430 | 137 | 137 | 139 | 145 | 145 | 145 |
| | 200 | 330 | 440 | 141 | 141 | 143 | 146 | 147 | 149 |
| | 250 | 390 | 450 | 165 | 165 | 149 | 172 | 171 | 177 |
| | 300 | 445 | 460 | 179 | 179 | 184 | 182 | 185 | 190 |
| | 350 | 505 | 470 | 193 | 195 | 203 | 198 | 201 | 210 |
| | 400 | 565 | 480 | 199 | 205 | 216 | 205 | 211 | 222 |
| | 450 | 620 | 490 | 220 | 228 | 244 | 226 | 235 | 250 |
| | 500 | 680 | 500 | 232 | 247 | 259 | 238 | 253 | 265 |
| 600 | 100 | 220 | 480 | 171 | 171 | 171 | 167 | 167 | 168 |
| | 150 | 280 | 490 | 187 | 187 | 188 | 182 | 182 | 183 |
| | 200 | 340 | 500 | 189 | 189 | 191 | 185 | 185 | 188 |
| | 250 | 395 | 510 | 219 | 218 | 222 | 215 | 215 | 218 |
| | 300 | 450 | 520 | 235 | 235 | 240 | 231 | 231 | 236 |
| | 350 | 510 | 530 | 252 | 255 | 263 | 247 | 251 | 260 |
| | 400 | 570 | 540 | 258 | 263 | 274 | 254 | 259 | 270 |
| | 450 | 625 | 550 | 285 | 293 | 309 | 281 | 289 | 305 |
| | 500 | 685 | 560 | 304 | 309 | 331 | 301 | 305 | 327 |
| | 600 | 800 | 580 | 340 | 366 | 380 | 336 | 363 | 376 |
| 700 | 100 | 230 | 510 | 242 | 242 | 243 | 242 | 242 | 244 |
| | 150 | 285 | 515 | 246 | 246 | 247 | 246 | 240 | 247 |
| | 200 | 345 | 525 | 242 | 242 | 251 | 249 | 249 | 251 |
| | 300 | 460 | 540 | 300 | 300 | 306 | 301 | 301 | 307 |
| | 350 | 520 | 545 | 312 | 315 | 324 | 313 | 316 | 325 |
| | 400 | 575 | 555 | 320 | 325 | 344 | 329 | 334 | 345 |
| | 450 | 635 | 560 | 369 | 378 | 391 | 370 | 379 | 392 |
| | 500 | 690 | 570 | 391 | 406 | 418 | 392 | 407 | 419 |
| | 600 | 810 | 585 | 421 | 445 | 456 | 422 | 445 | 457 |
| | 700 | 925 | 600 | 460 | 475 | 525 | 476 | 488 | 525 |
| 800 | 100 | 235 | 570 | 304 | 304 | 305 | 295 | 295 | 295 |
| | 150 | 290 | 580 | 308 | 308 | 309 | 298 | 298 | 299 |
| | 200 | 350 | 585 | 306 | 306 | 313 | 302 | 301 | 303 |
| | 250 | 410 | 590 | 351 | 351 | 355 | 342 | 341 | 346 |
| | 300 | 465 | 600 | 371 | 371 | 377 | 362 | 362 | 368 |
| | 400 | 580 | 615 | 398 | 403 | 421 | 396 | 401 | 412 |
| | 500 | 700 | 630 | 522 | 537 | 549 | 513 | 528 | 540 |
| | 600 | 815 | 645 | 579 | 605 | 624 | 579 | 603 | 614 |
| | 700 | 980 | 660 | 620 | 635 | 669 | 611 | 626 | 660 |
| | 800 | 1045 | 675 | 623 | 642 | 708 | 631 | 646 | 699 |

# DOUBLE SOCKET TEE WITH FLANGED BRANCH

| Double Socket Tee With Flanged Branch | | | | | | | | | |
|---|---|---|---|---|---|---|---|---|---|
| Body | Banch | L | H | T-type | | | K-type | | |
| DN | dn | | | PN10 | PN16 | PN25 | PN10 | PN16 | PN25 |
| 900 | 100 | 240 | 630 | 378 | 378 | 378 | 365 | 365 | 366 |
| | 150 | 300 | 635 | 381 | 381 | 382 | 368 | 368 | 369 |
| | 200 | 355 | 645 | 379 | 379 | 386 | 371 | 371 | 373 |
| | 300 | 470 | 660 | 455 | 455 | 461 | 442 | 442 | 448 |
| | 400 | 590 | 675 | 490 | 495 | 513 | 484 | 488 | 499 |
| | 500 | 706 | 690 | 666 | 681 | 693 | 653 | 668 | 690 |
| | 600 | 820 | 705 | 748 | 774 | 784 | 745 | 769 | 783 |
| | 700 | 935 | 720 | 788 | 803 | 837 | 775 | 790 | 824 |
| | 800 | 1050 | 735 | 808 | 823 | 876 | 795 | 810 | 863 |
| | 900 | 1170 | 750 | 814 | 838 | 920 | 822 | 841 | 907 |
| 1000 | 100 | 245 | 690 | 461 | 461 | 462 | 461 | 461 | 462 |
| | 150 | 305 | 695 | 464 | 464 | 465 | 464 | 464 | 465 |
| | 200 | 360 | 705 | 462 | 462 | 469 | 467 | 467 | 469 |
| | 250 | 420 | 710 | 521 | 521 | 525 | 521 | 521 | 525 |
| | 300 | 480 | 720 | 552 | 552 | 558 | 552 | 552 | 558 |
| | 400 | 595 | 735 | 591 | 596 | 614 | 598 | 603 | 614 |
| | 500 | 710 | 759 | 852 | 867 | 879 | 852 | 867 | 879 |
| | 600 | 825 | 765 | 947 | 973 | 994 | 958 | 982 | 994 |
| | 700 | 940 | 780 | 985 | 1000 | 1032 | 985 | 1000 | 1032 |
| | 800 | 1060 | 795 | 1006 | 1021 | 1074 | 1006 | 1021 | 1074 |
| | 900 | 1175 | 810 | 1052 | 1076 | 1137 | 1052 | 1076 | 1137 |
| | 1000 | 1290 | 825 | 1044 | 1086 | 1192 | 1072 | 1106 | 1192 |
| 1200 | 100 | 260 | 810 | 676 | 676 | 676 | 676 | 676 | 676 |
| | 200 | 375 | 825 | 682 | 682 | 684 | 682 | 682 | 684 |
| | 300 | 490 | 840 | 760 | 769 | 775 | 769 | 769 | 775 |
| | 400 | 605 | 855 | 852 | 856 | 867 | 852 | 856 | 867 |
| | 500 | 720 | 870 | 968 | 973 | 995 | 968 | 973 | 995 |
| | 600 | 840 | 885 | 1000 | 1027 | 1067 | 1031 | 1055 | 1067 |
| | 700 | 955 | 900 | 1169 | 1184 | 1218 | 1169 | 1184 | 1218 |
| | 800 | 1070 | 915 | 1190 | 1210 | 1295 | 1227 | 1242 | 1295 |
| | 900 | 1185 | 930 | 1367 | 1427 | 1452 | 1367 | 1427 | 1452 |
| | 1000 | 1300 | 945 | 1436 | 1470 | 1556 | 1436 | 1470 | 1556 |
| | 1200 | 1535 | 975 | 1682 | 1736 | 1846 | 1682 | 1736 | 1846 |

# DOUBLE SOCKET TEE WITH FLANGED BRANCH

| Double Socket Tee With Flanged Branch | | | | | | | | | |
|---|---|---|---|---|---|---|---|---|---|
| Body | Banch | L | H | T-type | | | K-type | | |
| DN | dn | | | PN10 | PN16 | PN25 | PN10 | PN16 | PN25 |
| 1400 | 100 | 450 | 905 | 1120 | 1120 | 1120 | 1120 | 1120 | 1120 |
| | 200 | 565 | 920 | 1240 | 1240 | 1242 | 948 | 948 | 950 |
| | 300 | 680 | 935 | 1338 | 1338 | 1343 | 1046 | 1046 | 1051 |
| | 400 | 800 | 950 | 1442 | 1449 | 1458 | 1150 | 1156 | 1166 |
| | 500 | 945 | 965 | 1540 | 1554 | 1564 | 1247 | 1262 | 1272 |
| | 600 | 1030 | 980 | 1681 | 1706 | 1718 | 1389 | 1414 | 1426 |
| | 800 | 1260 | 1010 | 1908 | 1926 | 1972 | 1616 | 1634 | 1680 |
| | 1000 | 1495 | 1040 | 2155 | 2193 | 2266 | 1863 | 1901 | 1973 |
| | 1200 | 1725 | 1070 | 2398 | 2457 | 2547 | 2106 | 2164 | 2255 |
| | 1400 | 1960 | 1100 | 2686 | 2747 | 2887 | 2394 | 2455 | 2595 |
| 1600 | 200 | 580 | 1030 | 1748 | 1748 | 1750 | 1318 | 1318 | 1320 |
| | 250 | 635 | 1040 | 1810 | 1809 | 1813 | 1380 | 1379 | 1383 |
| | 300 | 695 | 1045 | 1876 | 1876 | 1881 | 1446 | 1446 | 1451 |
| | 400 | 810 | 1060 | 2002 | 2008 | 2017 | 1572 | 1578 | 1587 |
| | 500 | 925 | 1075 | 2129 | 2143 | 2154 | 1699 | 1713 | 1724 |
| | 600 | 1040 | 1090 | 2260 | 2285 | 2297 | 1908 | 1934 | 1967 |
| | 800 | 1275 | 1120 | 2811 | 2829 | 2875 | 2381 | 2399 | 2445 |
| | 1000 | 1505 | 1150 | 2824 | 2862 | 2935 | 2480 | 2522 | 2594 |
| | 1200 | 1740 | 1180 | 3146 | 3205 | 3295 | 2799 | 2863 | 2954 |
| | 1400 | 1970 | 1210 | 3478 | 3539 | 3679 | 3048 | 3109 | 3249 |
| | 1600 | 2200 | 1240 | 3883 | 3975 | 4135 | 3453 | 3545 | 3706 |
| 1800 | 200 | 595 | 1150 | 2146 | 2146 | 2148 | 1697 | 1697 | 1699 |
| | 250 | 650 | 1150 | 2220 | 2220 | 2224 | 1771 | 1771 | 1774 |
| | 300 | 705 | 1155 | 2295 | 2294 | 2300 | 1846 | 1845 | 1850 |
| | 400 | 820 | 1170 | 2446 | 2454 | 2463 | 1998 | 2005 | 2014 |
| | 500 | 940 | 1185 | 2608 | 2623 | 2633 | 2159 | 2174 | 2184 |
| | 600 | 1055 | 1200 | 2765 | 2791 | 2803 | 2414 | 2440 | 2453 |
| | 800 | 1288 | 1230 | 3092 | 3109 | 3155 | 2748 | 2767 | 2813 |
| | 1000 | 1520 | 1260 | 3434 | 3472 | 3545 | 3095 | 3137 | 3210 |
| | 1200 | 1750 | 1290 | 3798 | 3856 | 3947 | 3460 | 3524 | 3614 |
| | 1400 | 1980 | 1320 | 4173 | 4233 | 4373 | 3723 | 3784 | 3924 |
| | 1600 | 2215 | 1350 | 4617 | 4710 | 4870 | 4168 | 4260 | 4421 |
| | 1800 | 2445 | 1380 | 5075 | 5188 | 5405 | 4626 | 4739 | 4956 |

| Double Socket Tee With Flanged Branch | | | | | | |
|---|---|---|---|---|---|---|
| Body | Banch | L | H | K-type | | |
| DN | dn | | | PN10 | PN16 | PN25 |
| 2000 | 200 | 600 | 1250 | 2117 | 2117 | 2119 |
| | 250 | 660 | 1250 | 2214 | 2214 | 2218 |
| | 300 | 720 | 1270 | 2312 | 2311 | 2317 |
| | 400 | 835 | 1290 | 2496 | 2502 | 2511 |
| | 500 | 950 | 1305 | 2681 | 2695 | 2705 |
| | 600 | 1065 | 1310 | 2988 | 3015 | 3028 |
| | 800 | 1300 | 1340 | 3231 | 3248 | 3294 |
| | 1000 | 1530 | 1370 | 3790 | 3832 | 3904 |
| | 1200 | 1760 | 1400 | 4014 | 4072 | 4163 |
| | 1400 | 1995 | 1430 | 4645 | 4713 | 4852 |
| | 1600 | 2225 | 1460 | 4892 | 4984 | 5144 |
| | 1800 | 2460 | 1490 | 5367 | 5480 | 5697 |
| | 2000 | 2690 | 1520 | 5999 | 6136 | 6458 |



# DOUBLE SOCKET LEVEL INVERT TEE



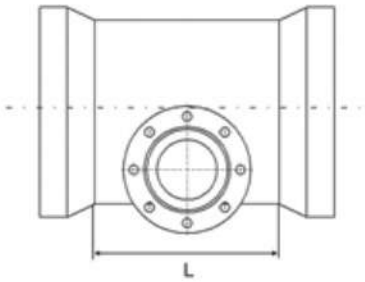


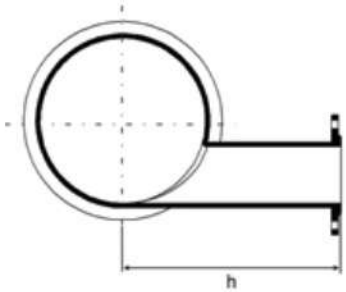


| Double Socket Level Invert Tee | | | | | | | | | |
|---|---|---|---|---|---|---|---|---|---|
| Body | Banch | L | H | T-type | | | K-type | | |
| DN | dn | | | PN10 | PN16 | PN25 | PN10 | PN16 | PN25 |
| 200 | 100 | 200 | 240 | 36,5 | 36,5 | 37 | 41 | 41 | 41,5 |
| | 150 | 250 | 250 | 44 | 44 | 45 | 48,5 | 48,5 | 49,5 |
| 250 | 100 | 200 | 270 | 47,5 | 47,5 | 49 | 51,1 | 51,1 | 52,6 |
| | 150 | 255 | 280 | 62,6 | 62,6 | 63,5 | 66,2 | 66,2 | 67,1 |
| | 200 | 315 | 290 | 65 | 65 | 67 | 68,6 | 68,6 | 70,6 |
| 300 | 100 | 205 | 300 | 59 | 59 | 60,5 | 69,8 | 69,8 | 71,3 |
| | 150 | 260 | 310 | 74 | 74 | 75 | 74,8 | 74,8 | 75,8 |
| | 200 | 320 | 320 | 80 | 79 | 82 | 90,8 | 90,8 | 92,8 |
| 350 | 100 | 205 | 330 | 73 | 73 | 73 | 83,4 | 83,4 | 83,4 |
| | 150 | 265 | 340 | 91,5 | 91,5 | 92 | 102 | 102 | 102 |
| | 200 | 325 | 350 | 96 | 96 | 98 | 106 | 106 | 108 |
| 400 | 100 | 210 | 360 | 89 | 89 | 89 | 99,4 | 99,4 | 99,4 |
| | 150 | 265 | 370 | 101 | 101 | 102 | 111 | 111 | 112 |
| | 200 | 325 | 380 | 115 | 114 | 116 | 125 | 125 | 126 |
| | 250 | 380 | 390 | 134 | 133 | 138 | 144 | 144 | 148 |
| 450 | 100 | 210 | 400 | 114 | 114 | 114 | 121 | 121 | 121 |
| | 150 | 270 | 400 | 130 | 130 | 131 | 137 | 137 | 138 |
| | 200 | 325 | 410 | 142 | 142 | 144 | 149 | 149 | 151 |
| | 250 | 385 | 420 | 155 | 154 | 159 | 162 | 162 | 166 |
| | 300 | 445 | 430 | 174 | 174 | 180 | 181 | 181 | 187 |
| 500 | 100 | 215 | 420 | 124 | 124 | 125 | 130 | 130 | 131 |
| | 150 | 274 | 430 | 149 | 150 | 151 | 155 | 156 | 157 |
| | 200 | 330 | 440 | 158 | 157 | 159 | 164 | 164 | 165 |
| | 250 | 390 | 450 | 182 | 181 | 185 | 188 | 188 | 191 |
| | 300 | 445 | 460 | 2201 | 201 | 206 | 207 | 207 | 212 |
| 600 | 100 | 220 | 480 | 185 | 185 | 185 | 184 | 183 | 183 |
| | 150 | 280 | 480 | 199 | 199 | 200 | 197 | 197 | 198 |
| | 200 | 340 | 500 | 205 | 205 | 207 | 203 | 203 | 205 |
| | 250 | 395 | 510 | 239 | 238 | 243 | 237 | 236 | 341 |
| | 300 | 450 | 520 | 257 | 257 | 261 | 255 | 255 | 259 |
| | 350 | 510 | 530 | 283 | 289 | 295 | 281 | 287 | 293 |
| | 400 | 570 | 540 | 294 | 300 | 310 | 292 | 298 | 308 |

# DOUBLE SOCKET LEVEL INVERT TEE

| Double Socket Level Invert Tee | | | | | | | | | |
|---|---|---|---|---|---|---|---|---|---|
| Body | Banch | L | H | T-type | | | K-type | | |
| DN | dn | | | PN10 | PN16 | PN25 | PN10 | PN16 | PN25 |
| 700 | 100 | 230 | 510 | 261 | 261 | 262 | 253 | 253 | 254 |
| | 150 | 285 | 515 | 265 | 265 | 266 | 255 | 255 | 256 |
| | 200 | 345 | 525 | 269 | 269 | 671 | 280 | 280 | 282 |
| | 300 | 460 | 540 | 324 | 324 | 330 | 320 | 319 | 326 |
| 800 | 100 | 235 | 570 | 328 | 328 | 329 | 308 | 308 | 309 |
| | 150 | 290 | 575 | 335 | 335 | 336 | 310 | 310 | 311 |
| | 200 | 350 | 585 | 336 | 336 | 338 | 335 | 335 | 337 |
| | 250 | 410 | 590 | 379 | 379 | 383 | 355 | 354 | 358 |
| | 300 | 465 | 630 | 401 | 401 | 407 | 380 | 379 | 385 |
| 900 | 150 | 300 | 635 | 409 | 409 | 410 | 382 | 382 | 383 |
| | 200 | 355 | 645 | 416 | 416 | 418 | 396 | 396 | 398 |
| | 300 | 470 | 660 | 491 | 491 | 497 | 460 | 459 | 465 |
| | 400 | 590 | 675 | 537 | 542 | 553 | 504 | 508 | 519 |
| 1000 | 100 | 145 | 690 | 449,9 | 449,8 | 450,4 | 407,9 | 407,8 | 408,4 |
| | 150 | 305 | 695 | 476,7 | 476,7 | 477,7 | 434,7 | 434,7 | 435,7 |
| | 200 | 360 | 705 | 504,4 | 504,4 | 506,2 | 462,4 | 462,4 | 462,2 |
| | 300 | 480 | 720 | 569,9 | 569,6 | 574,8 | 527,9 | 527,6 | 532,8 |
| 1200 | 200 | 375 | 825 | 738,1 | 738,1 | 739,9 | 626,1 | 626,1 | 627,9 |
| | 400 | 605 | 855 | 904,5 | 911,0 | 920,2 | 792,5 | 799,0 | 808,2 |
| 1400 | 200 | 565 | 920 | 1156 | 1256 | 1258 | 963,4 | 963,4 | 965,2 |
| | 400 | 800 | 950 | 1463 | 1470 | 1479 | 1177 | 1177 | 1187 |
| | 600 | 1030 | 980 | 1708 | 1733 | 1745 | 1415 | 1440 | 1453 |
| 1600 | 400 | 810 | 1060 | 2029 | 2036 | 2045 | 1599 | 1606 | 1615 |
| 1800 | 400 | 820 | 1170 | 2486 | 2492 | 2501 | 2037 | 2043 | 2052 |
| 2000 | 400 | 835 | 1280 | / | / | / | 2542 | 2548 | 2588 |
| | 600 | 1065 | 1310 | / | / | / | 2988 | 3015 | 3026 |

# ALL SOCKET 45° ANGLE BRANCH



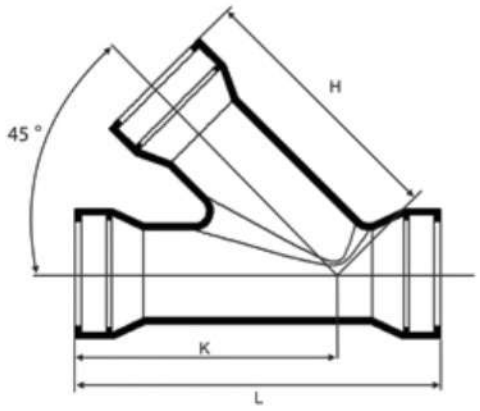


| All Socket 45° Angle Branch | | | | | | |
|---|---|---|---|---|---|---|
| Body | Banch | L | K | H | Mass (kg) | |
| DN | dn | | | | T-type | K-type |
| 80 | 80 | 290 | 215 | 215 | 21,4 | 21,4 |
| 100 | 80 | 290 | 225 | 230 | 25 | 25 |
| | 100 | 320 | 240 | 240 | 26,8 | 26,8 |
| 150 | 80 | 290 | 250 | 265 | 37,1 | 37,1 |
| | 100 | 320 | 265 | 275 | 39,4 | 39,4 |
| | 150 | 390 | 300 | 300 | 46 | 46 |
| 200 | 80 | 290 | 275 | 300 | 52,7 | 52,3 |
| | 100 | 320 | 290 | 31 | 55,3 | 54,9 |
| | 150 | 390 | 325 | 335 | 62,8 | 62,4 |
| | 200 | 460 | 360 | 360 | 71,5 | 70,9 |
| 250 | 80 | 290 | 300 | 335 | 72,5 | 71,7 |
| | 100 | 320 | 315 | 345 | 75,4 | 74,6 |
| | 150 | 390 | 350 | 370 | 83,8 | 83 |
| | 200 | 460 | 385 | 395 | 93,7 | 92,7 |
| | 250 | 530 | 420 | 420 | 104 | 103 |
| 300 | 80 | 290 | 325 | 370 | 96,3 | 96 |
| | 100 | 320 | 340 | 380 | 99,6 | 98,8 |
| | 150 | 390 | 375 | 405 | 109 | 108 |
| | 200 | 460 | 410 | 430 | 120 | 119 |
| | 250 | 530 | 445 | 455 | 132 | 131 |
| | 300 | 600 | 480 | 480 | 145 | 144 |
| 350 | 100 | 380 | 405 | 455 | 126 | 139 |
| | 150 | 450 | 440 | 480 | 136 | 149 |
| | 200 | 520 | 475 | 505 | 146 | 159 |
| | 250 | 690 | 510 | 530 | 158 | 170 |
| | 300 | 660 | 545 | 555 | 171 | 187 |
| | 350 | 730 | 580 | 580 | 186 | 201 |
| 400 | 100 | 380 | 430 | 499 | 159 | 172 |
| | 150 | 450 | 465 | 515 | 170 | 183 |
| | 200 | 520 | 500 | 540 | 182 | 195 |
| | 250 | 590 | 535 | 565 | 195 | 206 |
| | 300 | 660 | 570 | 590 | 209 | 225 |
| | 350 | 730 | 605 | 615 | 225 | 241 |
| | 400 | 800 | 640 | 640 | 242 | 258 |

# ALL SOCKET 45° ANGLE BRANCH

| All Socket 45° Angle Branch | | | | | | |
|---|---|---|---|---|---|---|
| Body | Banch | L | K | H | Mass (kg) | |
| DN | dn | | | | T-type | K-type |
| 450 | 100 | 380 | 455 | 525 | 198 | 208 |
| | 150 | 450 | 490 | 550 | 210 | 221 |
| | 200 | 520 | 525 | 575 | 223 | 233 |
| | 250 | 590 | 560 | 600 | 237 | 247 |
| | 350 | 730 | 630 | 650 | 270 | 283 |
| | 400 | 800 | 665 | 675 | 288 | 301 |
| | 450 | 870 | 700 | 700 | 307 | 320 |
| 500 | 100 | 380 | 480 | 560 | 243 | 251 |
| | 150 | 450 | 515 | 585 | 256 | 264 |
| | 200 | 520 | 550 | 610 | 269 | 277 |
| | 250 | 590 | 585 | 635 | 286 | 293 |
| | 300 | 660 | 620 | 660 | 303 | 314 |
| | 350 | 730 | 655 | 685 | 321 | 332 |
| | 400 | 800 | 690 | 710 | 340 | 351 |
| | 450 | 870 | 725 | 735 | 361 | 371 |
| | 500 | 940 | 760 | 760 | 383 | 392 |
| 600 | 100 | 380 | 565 | 655 | 347 | 346 |
| | 150 | 450 | 600 | 680 | 364 | 363 |
| | 200 | 520 | 635 | 705 | 381 | 379 |
| | 250 | 590 | 670 | 730 | 399 | 379 |
| | 300 | 660 | 705 | 755 | 418 | 419 |
| | 350 | 730 | 740 | 780 | 439 | 440 |
| | 400 | 800 | 775 | 805 | 461 | 463 |
| | 450 | 870 | 810 | 830 | 485 | 486 |
| | 500 | 940 | 845 | 855 | 511 | 510 |
| | 600 | 1080 | 880 | 880 | 567 | 562 |
| 700 | 700 | 1220 | 1000 | 1000 | 950 | 935 |
| 800 | 800 | 1360 | 1120 | 1120 | 1769 | 1733 |
| 900 | 900 | 1500 | 1240 | 1240 | 1795 | 1753 |
| 1000 | 1000 | 1640 | 1360 | 1360 | 2310 | 2310 |
| 1200 | 1200 | 1780 | 1480 | 1480 | 3015 | 3015 |

# ALL SOCKET CROSS



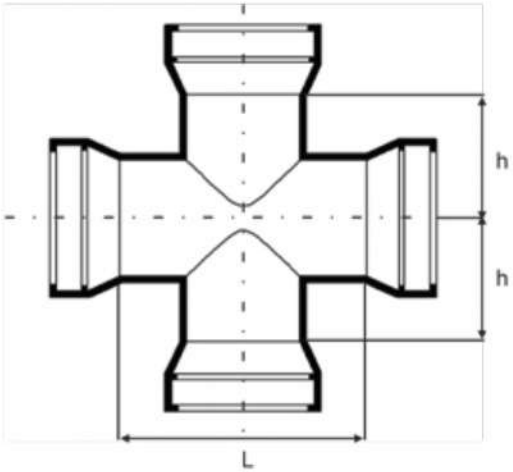


| All Socket Cross | | | | | |
|---|---|---|---|---|---|
| Body | Banch | L | H | Mass (kg) | |
| DN | dn | | | T-type | K-type |
| 100 | 100 | 190 | 95 | 19,8 | 23,9 |
| 150 | 100 | 195 | 120 | 26,6 | 36,4 |
| | 150 | 255 | 125 | 33,6 | 43,8 |
| 200 | 100 | 200 | 145 | 34,2 | 48,4 |
| | 150 | 255 | 150 | 41,7 | 51,2 |
| | 200 | 315 | 155 | 50,9 | 59,7 |
| 250 | 100 | 200 | 170 | 44,9 | 52,4 |
| | 150 | 260 | 175 | 57,9 | 66,8 |
| | 200 | 315 | 180 | 64,2 | 71,4 |
| | 250 | 375 | 435 | 75,1 | 80,7 |
| 300 | 100 | 205 | 195 | 55,7 | 71,2 |
| | 150 | 260 | 200 | 71,1 | 87 |
| | 200 | 320 | 205 | 77,6 | 92,8 |
| | 250 | 380 | 210 | 93,3 | 107 |
| | 300 | 435 | 220 | 101 | 123 |
| 350 | 200 | 325 | 230 | 91,7 | 107 |
| | 250 | 380 | 235 | 110 | 123 |
| | 300 | 440 | 245 | 123 | 144 |
| | 350 | 495 | 250 | 137 | 157 |
| 400 | 200 | 325 | 255 | 108 | 122 |
| | 250 | 385 | 260 | 130 | 143 |
| | 300 | 440 | 270 | 142 | 163 |
| | 350 | 500 | 275 | 157 | 178 |
| | 400 | 560 | 280 | 177 | 198 |
| 500 | 250 | 390 | 310 | 174 | 183 |
| | 300 | 450 | 320 | 191 | 208 |
| | 350 | 505 | 325 | 207 | 223 |
| | 400 | 565 | 330 | 223 | 239 |
| | 500 | 680 | 340 | 272 | 284 |
| 600 | 300 | 455 | 370 | 249 | 256 |
| | 350 | 510 | 375 | 267 | 274 |
| | 400 | 570 | 380 | 248 | 284 |
| | 500 | 685 | 390 | 330 | 332 |
| | 600 | 800 | 400 | 399 | 392 |

# ALL SOCKET CROSS

| All Socket Cross | | | | | |
|---|---|---|---|---|---|
| Body | Banch | L | H | Mass (kg) | |
| DN | dn | | | T-type | K-type |
| 700 | 350 | 520 | 425 | 413 | 410 |
| | 400 | 575 | 430 | 447 | 441 |
| | 500 | 690 | 440 | 520 | 510 |
| | 600 | 810 | 450 | 607 | 589 |
| | 700 | 925 | 460 | 712 | 691 |
| 800 | 400 | 580 | 480 | 548 | 527 |
| | 500 | 700 | 490 | 532 | 608 |
| | 600 | 815 | 500 | 725 | 692 |
| | 700 | 930 | 510 | 931 | 796 |
| | 800 | 1045 | 525 | 963 | 914 |
| 900 | 500 | 705 | 540 | 757 | 729 |
| | 600 | 802 | 550 | 859 | 823 |
| | 700 | 935 | 560 | 969 | 930 |
| | 800 | 1050 | 575 | 1105 | 1052 |
| | 900 | 1170 | 585 | 1262 | 1205 |
| 1000 | 600 | 825 | 600 | 1011 | 1003 |
| | 700 | 940 | 610 | 1130 | 1120 |
| | 800 | 1060 | 625 | 1276 | 1251 |
| | 900 | 1175 | 635 | 1432 | 1404 |
| | 1000 | 1290 | 645 | 1612 | 1612 |
| 1200 | 800 | 1070 | 725 | 1677 | 1652 |
| | 900 | 1185 | 735 | 1847 | 1818 |
| | 1000 | 1300 | 745 | 2034 | 2034 |
| | 1200 | 1535 | 765 | 2497 | 2497 |
| 1400 | 900 | 1200 | 835 | 2261 | 2232 |
| | 1000 | 1315 | 845 | 2468 | 2468 |
| | 1200 | 1545 | 865 | 2940 | 2940 |
| | 1400 | 1780 | 890 | 3446 | 3446 |

# DOUBLE SOCKET TAPER/REDUCER



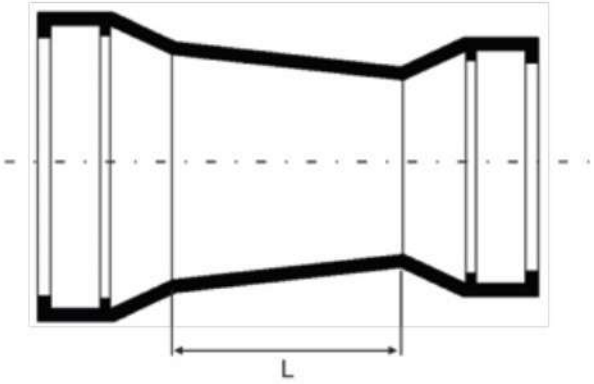


| Double Socket Taper/Reducer | | | | |
|---|---|---|---|---|
| DN | dn | L | Mass (kg) | |
| | | | T-type | K-type |
| 100 | 80 | 90 | 8,8 | 12,3 |
| 150 | 80 | 190 | 13,5 | 17,5 |
| | 100 | 150 | 13,8 | 18,7 |
| 200 | 80 | 290 | 20,5 | 23 |
| | 100 | 250 | 20,5 | 25,2 |
| | 150 | 150 | 21 | 26 |
| 250 | 80 | 390 | 28,5 | 31 |
| | 100 | 300 | 28,5 | 32,2 |
| | 150 | 250 | 29 | 33,2 |
| | 200 | 150 | 29 | 33 |
| 300 | 80 | 490 | 39 | 42,9 |
| | 100 | 450 | 39 | 46,9 |
| | 150 | 350 | 39,5 | 46,9 |
| | 200 | 250 | 39,8 | 46,9 |
| | 250 | 150 | 38,5 | 45,7 |
| 350 | 80 | 600 | 51,5 | 57,9 |
| | 100 | 500 | 50 | 58,2 |
| | 150 | 460 | 52 | 60,1 |
| | 200 | 360 | 52 | 60,1 |
| | 250 | 260 | 51 | 52,1 |
| | 300 | 160 | 49,5 | 64,9 |
| 400 | 80 | 700 | 6471,4 | 100 |
| | 660 | 65 | 72,3 | 150 |
| | 150 | 560 | 66,5 | 78,4 |
| | 200 | 460 | 67 | 78,3 |
| | 250 | 360 | 66 | 77,2 |
| | 300 | 260 | 64 | 80,1 |
| | 350 | 160 | 62 | 78 |
| 450 | 80 | 760 | 87,9 | 88,8 |
| | 100 | 160 | 87,9 | 94,2 |
| | 150 | 660 | 88,9 | 95,3 |
| | 200 | 560 | 88,9 | 95,3 |
| | 250 | 460 | 89,2 | 94,2 |
| | 300 | 360 | 88,1 | 97,1 |
| | 350 | 260 | 86 | 95 |
| | 400 | 160 | 83,1 | 92 |

# DOUBLE SOCKET TAPER/REDUCER

| Double Socket Taper/Reducer | | | | |
|---|---|---|---|---|
| DN | dn | L | Mass (kg) | |
| | | | T-type | K-type |
| 500 | 80 | 900 | 101 | 109,8 |
| | 100 | 860 | 101 | 106 |
| | 150 | 760 | 102 | 114 |
| | 200 | 660 | 101 | 114 |
| | 250 | 560 | 101 | 113 |
| | 300 | 460 | 100 | 116 |
| | 350 | 360 | 98 | 115 |
| | 400 | 260 | 94 | 111 |
| | 450 | 160 | 99,5 | 106 |
| 600 | 80 | 1100 | 152 | 153 |
| | 100 | 1060 | 152 | 153 |
| | 150 | 960 | 153 | 159 |
| | 200 | 860 | 154 | 159 |
| | 250 | 760 | 153 | 158 |
| | 300 | 660 | 152 | 161 |
| | 350 | 560 | 151 | 159 |
| | 400 | 460 | 142 | 156 |
| | 450 | 360 | 149 | 151 |
| | 500 | 260 | 131 | 145 |
| 700 | 200 | 1080 | 215,9 | 212,9 |
| | 250 | 980 | 216,1 | 212,3 |
| | 300 | 880 | 218,5 | 216,3 |
| | 350 | 780 | 212,4 | 212,9 |
| | 400 | 680 | 206,7 | 208,5 |
| | 450 | 580 | 199,6 | 204,1 |
| | 500 | 480 | 194 | 204 |
| | 600 | 280 | 178 | 187 |
| 800 | 400 | 880 | 285 | 277,9 |
| | 450 | 780 | 277,7 | 273,5 1 |
| | 500 | 680 | 272,2 | 266,6 |
| | 600 | 480 | 252 | 251 1 |
| | 700 | 280 | 229 | 236 |
| 900 | 400 | 1080 | 387,4 | 366,6 |
| | 450 | 980 | 372,2 | 362,2 |
| | 500 | 880 | 366,8 | 355,4 |
| | 600 | 680 | 349,4 | 336,7 |
| | 700 | 480 | 318 | 327 |
| | 800 | 280 | 288 | 294 |

| Double Socket Taper/Reducer | | | | |
|---|---|---|---|---|
| DN | dn | L | Mass (kg) | |
| | | | T-type | K-type |
| 1000 | 600 | 880 | 476 | 445 |
| | 700 | 680 | 446,3 | 420,8 |
| | 800 | 480 | 392 | 403 |
| | 900 | 280 | 354 | 368 |
| 1200 | 600 | 1280 | 745 | 691,8 |
| | 700 | 1080 | 729,6 | 669,1 |
| | 800 | 880 | 710,7 | 636 |
| | 900 | 680 | 674,3 | 599,3 |
| | 1000 | 480 | 570 | 580 |
| 1400 | 600 | 960 | 844,4 | 704,6 |
| | 700 | 860 | 855,6 | 705 |
| | 800 | 760 | 859,5 | 700,2 |
| | 900 | 660 | 862,8 | 697,7 |
| | 1000 | 560 | 861,6 | 694,5 |
| | 1200 | 360 | 711 | 698 |
| 1600 | 800 | 960 | 1207 | 978,7 |
| | 900 | 860 | 1220 | 985,7 |
| | 1000 | 760 | 1211 | 974,1 |
| | 1200 | 560 | 1212 | 940,9 |
| | 1400 | 360 | 950 | 936 |
| 1800 | 1000 | 960 | 1547 | 1301 |
| | 1200 | 760 | 1549 | 1269 |
| | 1400 | 560 | 1581 | 1210 |
| | 1600 | 360 | 1605 | 1235 |
| 2000 | 1000 | 1160 | / | 1696 |
| | 1200 | 960 | / | 1663 |
| | 1400 | 760 | / | 1605 |
| | 1600 | 560 | / | 1560 |
| | 1800 | 360 | / | 1566 |

# DOUBLE SOCKET TAPER / REDUCER

**Concentric Type**




**Flat Type**




| Double Socket Taper/Reducer | | | | | |
|---|---|---|---|---|---|
| DN | dn | L | Mass (kg) | | |
| | | | PN10 | PN16 | PN25 |
| 100 | 80 | 200 | 9,3 | 9,3 | 9,8 |
| 150 | 80 | 400 | 16 | 16,1 | 17,1 |
| | 100 | 300 | 15 | 15 | 17,5 |
| 200 | 80 | 600 | 25,1 | 25,1 | 26,9 |
| | 100 | 600 | 27,3 | 27,5 | 25 |
| | 150 | 300 | 22 | 27,5 | 25 |
| 250 | 100 | 600 | 33 | 32,6 | 36,8 |
| | 150 | 600 | 38,6 | 39,5 | 35,5 |
| | 200 | 300 | 30 | 29,5 | 35,5 |

| Double Socket Taper/Reducer | | | | | |
|---|---|---|---|---|---|
| DN | dn | L | Mass (kg) | | |
| | | | PN10 | PN16 | PN25 |
| 300 | 100 | 600 | 44 | 43,6 | 49,4 |
| | 150 | 600 | 46,4 | 46 | 52,6 |
| | 200 | 600 | 51,7 | 51 | 58,7 |
| | 250 | 300 | 40,5 | 39,5 | 49 |
| 350 | 100 | 750 | 52,3 | 55,2 | 63,7 |
| | 150 | 700 | 56,0 | 58,8 | 67,7 |
| | 200 | 600 | 58,1 | 60,5 | 70,9 |
| | 250 | 600 | 64,9 | 67 | 79,2 |
| | 300 | 300 | 49,5 | 52 | 66 |
| 400 | 100 | 800 | 62, | 69,4 | 79,1 |
| | 150 | 750 | 66,6 | 73,1 | 83,2 |
| | 200 | 600 | 65,7 | 71 | 84,4 |
| | 250 | 600 | 72 | 77 | 92,2 |
| | 300 | 600 | 78,8 | 84 | 101 |
| | 350 | 300 | 58 | 57 | 86 |
| 450 | 100 | 900 | 76,7 | 86,0 | 96,9 |
| | 150 | 800 | 77,4 | 86,7 | 98,0 |
| | 200 | 750 | 81,0 | 90,4 | 102,6 |
| | 250 | 600 | 79,5 | 87,5 | 96,9 |
| | 300 | 600 | 86,8 | 95 | 107 |
| | 350 | 600 | 92,7 | 104 | 118 |
| | 400 | 300 | 72,4 | 81 | 113 |
| 500 | 100 | 950 | 91,5 | 105,9 | 116,9 |
| | 150 | 900 | 95,8 | 110,2 | 121,6 |
| | 200 | 800 | 95,7 | 110,0 | 122,3 |
| | 250 | 700 | 99,4 | 114 | 130 |
| | 300 | 600 | 96,2 | 111 | 129 |
| | 350 | 600 | 103 | 103 | 141 |
| | 400 | 600 | 110 | 110 | 153 |
| | 450 | 300 | 115 | 115 | 157 |
| 600 | 100 | 1050 | 125,8 | 150,6 | 163,5 |
| | 150 | 1000 | 130,1 | 155,1 | 168,5 |
| | 250 | 900 | 139,5 | 164,1 | 180,2 |
| | 300 | 800 | 145 | 171 | 11 |
| | 350 | 700 | 138 | 167 | 190 |
| | 400 | 600 | 132 | 164 | 190 |
| | 450 | 600 | 140 | 175 | 195 |
| | 500 | 600 | 149 | 190 | 216 |

# DOUBLE SOCKET TAPER / REDUCER

| Double Socket Taper/Reducer | | | | | |
|---|---|---|---|---|---|
| DN | dn | L | Mass (kg) | | |
| | | | PN10 | PN16 | PN25 |
| 700 | 200 | 1100 | 181,1 | 195,3 | 229,6 |
| | 250 | 1050 | 186,8 | 200,6 | 236,7 |
| | 300 | 1100 | 192,4 | 206,2 | 243,9 |
| | 350 | 900 | 188,3 | 205,2 | 245,6 |
| | 400 | 800 | 183,5 | 204,1 | 245,8 |
| | 450 | 700 | 180 | 213 | 251 |
| | 500 | 600 | 178 | 208 | 252 |
| | 500 | 600 | 195 | 243 | 288 |
| 800 | 400 | 1030 | 260,8 | 285,0 | 340,2 |
| | 450 | 900 | 247,8 | 274,8 | 331,2 |
| | 500 | 800 | 255 | 285 | 347 |
| | 600 | 600 | 234 | 275 | 340 |
| | 700 | 600 | 250 | 285 | 374 |
| 900 | 400 | 1100 | 311,5 | 339,6 | 404,8 |
| | 450 | 1100 | 347 | 380 | 467 |
| | 500 | 1000 | 337 | 377 | 470 |
| | 600 | 800 | 315 | 366 | 462 |
| | 700 | 600 | 293 | 333 | 446 |
| | 800 | 600 | 308 | 352 | 468 |
| 1000 | 500 | 1200 | 452 | 501 | 585 |
| | 600 | 100 | 427 | 487 | 574 |
| | 700 | 800 | 43 | 452 | 556 |
| | 800 | 600 | 369 | 418 | 540 |
| | 900 | 600 | 373 | 438 | 545 |
| 1200 | 600 | 1150 | 555,2 | 638,5 | 741,6 |
| | 700 | 1345 | 698 | 768 | 882 |
| | 800 | 1160 | 695 | 765 | 897 |
| | 900 | 975 | 628 | 708 | 871 |
| | 1000 | 790 | 586 | 692 | 881 |
| 1400 | 700 | 850 | 554,7 | 629,6 | 801,81 |
| | 800 | 950 | 665,7 | 744,2 | 929,9 |
| | 900 | 1100 | 786,5 | 868,9 | 1065 |
| | 1000 | 1000 | 788 | 886,5 | 1099 |
| | 1200 | 850 | 814 | 947 | 1223 ' |
| 1600 | 1000 | 1650 | 1354 | 1484 | 1717 |
| | 1200 | 1000 | 1055 | 1205 | 1456 I |
| | 1400 | 910 | 1103 | 1273 | 1641 |
| 1800 | 1000 | 1760 | 1620 | 1770 | 2060 |
| | 1200 | 1710 | 1747 | 1899 | 2199 |
| | 1400 | 1340 | 1588 | 1760 | 2067 |

# DOUBLE FLANGE BEND 90°/45°

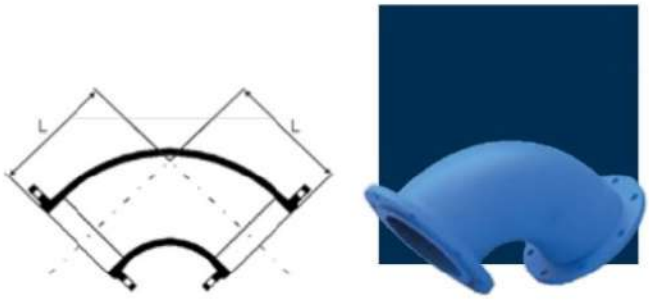


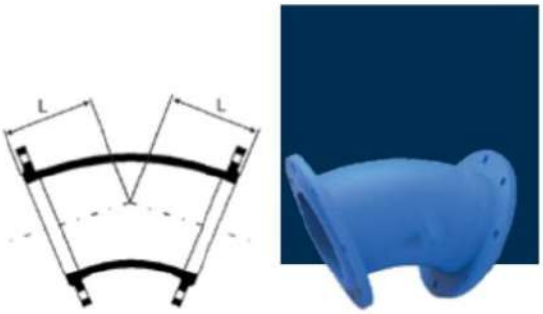


| Double Flange Bend 90° | | | | |
|---|---|---|---|---|
| dn | L | Mass (kg) | | |
| | | PN10 | PN16 | PN25 |
| 80 | 165 | 9,6 | 9,6 | 9,6 |
| 100 | 180 | 11,9 | 11,9 | 12,9 |
| 150 | 220 | 20 | 20 | 22 |
| 200 | 260 | 31 | 30,5 | 34,5 |
| 250 | 30 | 50 | 49,5 | 57 |
| 300 | 400 | 70 | 70 | 81 |
| 350 | 450 | 90 | 96 | 113 |
| 400 | 500 | 116 | 127 | 149 |
| 450 | 550 | 143 | 160 | 190 |
| 500 | 600 | 191 | 211 | 235 |
| 600 | 700 | 272 | 325 | 353 |
| 700 | 800 | 386 | 416 | 473 |
| 800 | 900 | 533 | 572 | 653 |
| 900 | 1000 | 698 | 745 | 841 |
| 1000 | 1400 | 907 | 990 | 1163 |
| 1200 | 1300 | 1490 | 1619 | 1728 |
| 1400 | 1350 | 2193 | 2335 | 2640 |
| 1600 | 1450 | 2663 | 2481 | 2778 |
| 1800 | 1550 | 3348 | 3572 | 3980 |
| 2000 | 1650 | 1307 | 4613 | 5065 |

| Double Flange Bend 45° | | | | |
|---|---|---|---|---|
| dn | L | Mass (kg) | | |
| | | PN10 | PN16 | PN25 |
| 80 | 130 | 9,3 | 9,3 | 9,3 |
| 100 | 140 | 11,3 | 11,3 | 12,4 |
| 150 | 160 | 18,5 | 18,5 | 20,5 |
| 200 | 180 | 27,5 | 27 | 31 |
| 250 | 350 | 55 | 54 | 62 |
| 300 | 400 | 78 | 77 | 88 |
| 350 | 298 | 76 | 83 | 89 |
| 400 | 324 | 96 | 107 | 129 |
| 450 | 349 | 116 | 132 | 158 |
| 500 | 375 | 14 | 175 | 198 |
| 600 | 426 | 212 | 266 | 294 |
| 700 | 478 | 296 | 326 | 388 |
| 800 | 529 | 403 | 442 | 528 |
| 900 | 581 | 519 | 567 | 669 |
| 1000 | 632 | 668 | 751 | 881 |
| 1200 | 750 | 1050 | 1170 | 1345 |
| 1400 | 775 | 1388 | 1524 | 1852 |
| 1600 | 845 | 1915 | 2119 | 2416 |
| 1800 | 910 | 2465 | 2417 | 3125 |
| 2000 | 980 | 3149 | 3455 | 3907 |

# BS4772 LONG BEND



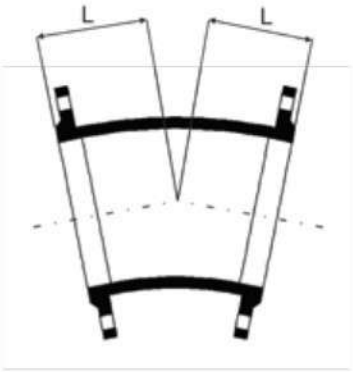


| Double Flange Bend 22,5° | | | | |
|---|---|---|---|---|
| DN | L | Mass (kg) | | |
| | | PN10 | PN16 | PN25 |
| 80 | 130 | 9,2 | 9,2 | 9,2 |
| 100 | 140 | 11,5 | 11,5 | 12,5 |
| 15 | 160 | 18,6 | 18,6 | 20,6 |
| 200 | 180 | 27,4 | 27 | 31,2 |
| 250 | 350 | 55,3 | 54,5 | 58,4 |
| 300 | 400 | 78,3 | 77,5 | 88,7 |
| 350 | 298 | 76,8 | 83 | 100 |
| 400 | 324 | 96 | 107 | 130 |
| 450 | 349 | 118 | 135 | 166 |
| 500 | 375 | 146 | 176 | 200 |
| 600 | 426 | 214 | 267 | 296 |
| 700 | 478 | 252 | 342 | / |
| 800 | 529 | 288 | 448 | / |
| 900 | 581 | 361 | 588 | / |
| 1000 | 632 | 459 | 773 | / |
| 1200 | 735 | 717 | 1213 | / |
| 1400 | 835 | 1021 | 1635 | / |
| 1600 | 940 | 1190 | 2325 | / |
| 1800 | / | 1640 | 1864 | / |
| 2000 | / | 2081 | 2357 | / |

| Double Flange Bend 11,25° | | | | |
|---|---|---|---|---|
| DN | L | Mass (kg) | | |
| | | PN10 | PN16 | PN25 |
| 80 | 130 | 9,2 | 9,2 | 9,2 |
| 100 | 140 | 11,5 | 11,5 | 12,5 |
| 150 | 160 | 18,6 | 18,6 | 20,6 |
| 200 | 180 | 27,9 | 27,5 | 31,7 |
| 250 | 350 | 55,8 | 55 | 58,9 |
| 300 | 400 | 78,8 | 78 | 89,2 |
| 350 | 298 | 77,3 | 83,5 | 100 |
| 400 | 324 | 96,8 | 108 | 131 |
| 450 | 349 | 118 | 135 | 166 |
| 500 | 375 | 147 | 177 | 201 |
| 600 | 426 | 215 | 268 | 297 |
| 700 | 478 | 240 | 343 | / |
| 800 | 529 | 270 | 451 | / |
| 900 | 581 | 303 | 592 | / |
| 1000 | 682 | 382 | 778 | / |
| 1200 | 735 | 590 | 1220 | / |
| 1400 | 835 | 827 | 1643 | / |
| 1600 | 940 | 1203 | 2338 | / |
| 1800 | / | 1342 | 1566 | / |
| 2000 | / | 1694 | 1970 | / |

# EN545 SERIES A BEND



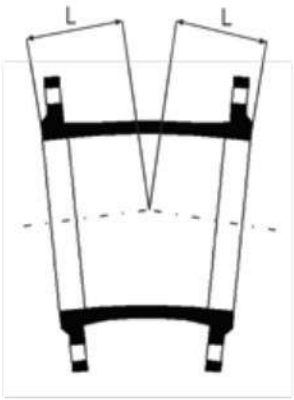


| Double Flange Bend 22,5° | | | | |
|---|---|---|---|---|
| DN | L | Mass (kg) | | |
| | | PN10 | PN16 | PN25 |
| 80 | 80 | 9,2 | 9,2 | 9,2 |
| 100 | 85 | 11,5 | 11,5 | 12,6 |
| 150 | 100 | 18,6 | 18,6 | 20,8 |
| 200 | 110 | 27 | 27 | 31 |
| 250 | 125 | 37,9 | 37,1 | 46 |
| 300 | 140 | 51 | 50,3 | 63 |
| 350 | 155 | 61,1 | 67,9 | 87,2 |
| 400 | 165 | 74,8 | 90,7 | 113,1 |
| 450 | 180 | 87,3 | 110 | 135,4 |
| 500 | 190 | 107,8 | 142,9 | 168,3 |
| 600 | 220 | 154,7 | 215,7 | 246 |
| 700 | 300 | 216,5 | 250,9 | 330,2 |
| 800 | 330 | 294,9 | 330,3 | 422,3 |
| 900 | 360 | 373 | 416,2 | 528,2 |
| 1000 | 390 | 477,2 | 552,6 | 697,8 |
| 1200 | 450 | 736,6 | 853,2 | 1035 |
| 1400 | 460 | 1021 | 1157 | 1388 |
| 1600 | 470 | 1284 | 1468 | 1789 |
| 1800 | 480 | 1640 | 1864 | 2229 |
| 2000 | 520 | 2081 | 2357 | 2914 |

| Double Flange Bend 11,25° | | | | |
|---|---|---|---|---|
| DN | L | Mass (kg) | | |
| | | PN10 | PN16 | PN25 |
| 80 | 70 | 9,2 | 9,2 | 9,2 |
| 100 | 75 | 11,5 | 11,5 | 12,5 |
| 150 | 85 | 17,2 | 17,2 | 19,5 |
| 200 | 90 | 24,3 | 24,4 | 28,8 |
| 250 | 100 | 34,7 | 33,8 | 42,8 |
| 300 | 110 | 46,4 | 45,7 | 58,4 |
| 350 | 120 | 54,9 | 61,8 | 81 |
| 400 | 130 | 66,8 | 82,7 | 105,1 |
| 450 | 135 | 76,6 | 99,3 | 124,7 |
| 500 | 140 | 93,6 | 128,7 | 164,1 |
| 600 | 169 | 134,7 | 195,7 | 225,9 |
| 700 | 205 | 206,6 | 241 | 320,3 |
| 800 | 230 | 270 | 308 | 367,3 |
| 900 | 245 | 303 | 351 | 450,2 |
| 1000 | 265 | 382 | 465 | 607 |
| 1200 | 360 | 639,2 | 755,8 | 937,2 |
| 1400 | 380 | 873,8 | 995,4 | 1275 |
| 1600 | 400 | 1203 | 1382 | 1664 |
| 1800 | 410 | 1415 | 1641 | 2075 |
| 2000 | 415 | 1711 | 1985 | 2629 |

# ALL FLANGE TEE



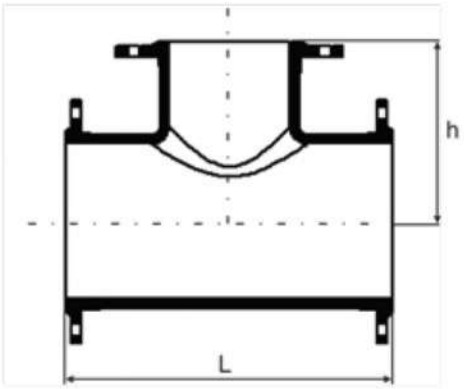


| All Flange Tee | | | | | | |
|---|---|---|---|---|---|---|
| Body | Banch | L | H | Mass (kg) | | |
| DN | dn | | | PN10 | PN16 | PN25 |
| 80 | 80 | 360 | 165 | 15,6 | 15,6 | 15,6 |
| 100 | 80 | 360 | 175 | 18,4 | 18,4 | 19,5 |
| | 100 | 360 | 180 | 19,4 | 19,4 | 21 |
| 150 | 80 | 440 | 205 | 28,5 | 28,5 | 31 |
| | 100 | 440 | 210 | 29,5 | 29,5 | 32 |
| | 150 | 440 | 220 | 32,5 | 32,5 | 36 |
| 200 | 80 | 520 | 235 | 42 | 41,5 | 46 |
| | 100 | 520 | 240 | 43 | 42 | 47,5 |
| | 150 | 520 | 250 | 46 | 46 | 51 |
| | 200 | 520 | 260 | 49,5 | 49 | 56 |
| 250 | 80 | 700 | 265 | 49,7 | 49,3 | 56,7 |
| | 100 | 700 | 275 | 68 | 67 | 75 |
| | 150 | 700 | 300 | 72 | 71 | 81 |
| | 200 | 700 | 325 | 76 | 75 | 85 |
| | 250 | 700 | 350 | 82 | 81 | 93 |
| 300 | 100 | 800 | 300 | 94 | 93 | 105 |
| | 150 | 800 | 325 | 98 | 97 | 109 |
| | 200 | 800 | 350 | 102 | 101 | 114 |
| | 250 | 800 | 375 | 109 | 108 | 121 |
| | 300 | 800 | 400 | 116 | 115 | 131 |
| 350 | 100 | 850 | 325 | 116 | 122 | 139 |
| | 150 | 850 | 325 | 119 | 125 | 142 |
| | 200 | 850 | 325 | 121 | 128 | 146 |
| | 250 | 850 | 325 | 128 | 134 | 154 |
| | 300 | 850 | 425 | 132 | 138 | 160 |
| | 350 | 850 | 425 | 142 | 151 | 176 |
| 400 | 100 | 900 | 350 | 143 | 154 | 177 |
| | 150 | 900 | 350 | 144 | 156 | 181 |
| | 200 | 900 | 350 | 148 | 159 | 184 |
| | 250 | 900 | 350 | 151 | 161 | 198 |
| | 300 | 900 | 450 | 160 | 184 | 213 |
| | 350 | 900 | 450 | 170 | 183 | 215 |
| | 400 | 900 | 450 | 174 | 191 | 225 |

# ALL FLANGE TEE

| All Flange Tee | | | | | | |
|---|---|---|---|---|---|---|
| Body | Banch | L | H | Mass (kg) | | |
| DN | dn | | | PN10 | PN16 | PN25 |
| 450 | 100 | 950 | 375 | 176 | 193 | 225 |
| | 150 | 950 | 375 | 182 | 199 | 231 |
| | 200 | 950 | 375 | 190 | 207 | 240 |
| | 250 | 950 | 375 | 199 | 216 | 250 |
| | 300 | 950 | 475 | 210 | 227 | 263 |
| | 350 | 950 | 475 | 219 | 240 | 279 |
| | 400 | 950 | 475 | 231 | 254 | 296 |
| | 450 | 950 | 475 | 243 | 269 | 315 |
| 500 | 100 | 1000 | 400 | 210 | 241 | 265 |
| | 150 | 1000 | 400 | 214 | 243 | 269 |
| | 200 | 1000 | 400 | 215 | 245 | 271 |
| | 250 | 1000 | 400 | 218 | 258 | 280 |
| | 300 | 1000 | 500 | 227 | 255 | 287 |
| | 350 | 1000 | 500 | 239 | 276 | 298 |
| | 400 | 1000 | 500 | 242 | 276 | 311 |
| | 450 | 1000 | 500 | 249 | 298 | 327 |
| | 500 | 1000 | 500 | 252 | 297 | 332 |
| 600 | 100 | 1100 | 450 | 268 | 329 | 352 |
| | 150 | 1100 | 450 | 283 | 340 | 370 |
| | 200 | 1100 | 450 | 305 | 358 | 388 |
| | 250 | 1100 | 450 | 307 | 360 | 392 |
| | 300 | 1100 | 550 | 312 | 374 | 398 |
| | 350 | 1100 | 550 | 328 | 380 | 413 |
| | 400 | 1100 | 550 | 329 | 387 | 427 |
| | 450 | 1100 | 550 | 338 | 417 | 448 |
| | 500 | 1100 | 550 | 349 | 420 | 464 |
| | 600 | 1100 | 550 | 355 | 434 | 477 |
| 700 | 100 | 540 | 510 | 253 | 295 | / |
| | 150 | 595 | 515 | 255 | 296 | / |
| | 200 | 650 | 525 | 258 | 298 | / |
| | 250 | 705 | 530 | 310 | 335 | / |
| | 300 | 760 | 540 | 319 | 342 | / |
| | 350 | 815 | 545 | 340 | 375 | / |
| | 400 | 870 | 555 | 543 | 379 | / |
| | 450 | 925 | 560 | 429 | 436 | / |
| | 500 | 980 | 570 | 442 | 481 | / |
| | 600 | 1090 | 585 | 476 | 523 | / |
| | 700 | 1200 | 600 | 477 | 523 | / |

| All Flange Tee | | | | | | |
|---|---|---|---|---|---|---|
| Body | Banch | L | H | Mass (kg) | | |
| DN | dn | | | PN10 | PN16 | PN25 |
| 1000 | 250 | 825 | 710 | 631 | 703 | / |
| | 300 | 880 | 720 | 651 | 739 | / |
| | 350 | 935 | 725 | 660 | 753 | / |
| | 400 | 990 | 735 | 668 | 755 | / |
| | 450 | 1045 | 740 | 850 | 911 | / |
| | 500 | 1100 | 750 | 955 | 1007 | / |
| | 600 | 1650 | 765 | 1007 | 1116 | / |
| | 700 | 1650 | 780 | 1067 | 1152 | / |
| | 800 | 1650 | 795 | 1085 | 1168 | / |
| | 900 | 1650 | 810 | 1095 | 1219 | / |
| | 1000 | 1650 | 825 | 1105 | 1229 | / |
| 1200 | 100 | 660 | 810 | 996 | 1082 | / |
| | 150 | 715 | 815 | 998 | 1084 | / |
| | 200 | 775 | 825 | 1000 | 1086 | / |
| | 250 | 830 | 830 | 1002 | 1094 | / |
| | 300 | 890 | 840 | 1004 | 1106 | / |
| | 350 | 950 | 845 | 1006 | 1113 | / |
| | 400 | 1005 | 855 | 1008 | 1122 | / |
| | 500 | 1120 | 870 | 1109 | 1255 | / |
| | 600 | 1240 | 885 | 1101 | 1256 | / |
| | 700 | 1355 | 900 | 1279 | 1423 | / |
| | 800 | 1470 | 915 | 1291 | 1439 | / |
| | 900 | 1585 | 930 | 1427 | 1662 | / |
| | 1000 | 1700 | 945 | 1494 | 1664 | / |
| | 1200 | 1935 | 975 | 2201 | 2321 | / |
| 1400 | 100 | 970 | 905 | 1227 | 1363 | / |
| | 200 | 1085 | 920 | 1231 | 1367 | / |
| | 400 | 1320 | 950 | 1514 | 1656 | / |
| | 600 | 1550 | 980 | 1655 | 1818 | / |
| | 800 | 1780 | 1010 | 1886 | 2041 | / |
| | 1000 | 2015 | 1040 | 2131 | 2309 | / |
| | 1200 | 2245 | 1070 | 2567 | 2767 | / |
| | 1400 | 2480 | 1100 | 2781 | 2985 | / |

# ALL FLANGE TEE

| All Flange Tee | | | | | | |
|---|---|---|---|---|---|---|
| Body | Banch | L | H | Mass (kg) | | |
| DN | dn | | | PN10 | PN16 | PN25 |
| 1600 | 100 | 1020 | 1015 | 1874 | 2078 | / |
| | 200 | 1140 | 1030 | 1880 | 2084 | / |
| | 400 | 1370 | 1060 | 2000 | 2210 | / |
| | 600 | 1600 | 1090 | 2167 | 2398 | / |
| | 800 | 1835 | 1120 | 2452 | 2675 | / |
| | 1000 | 2065 | 1150 | 2740 | 2986 | / |
| | 1200 | 2300 | 1180 | 3058 | 3327 | / |
| | 1400 | 2530 | 1210 | 3498 | 3770 | / |
| | 1600 | 2760 | 1240 | 3886 | 4192 | / |
| 1800 | 100 | 1075 | 1125 | 2346 | 2598 | / |
| | 200 | 1190 | 1140 | 2350 | 2602 | / |
| | 400 | 1420 | 1170 | 2574 | 2835 | / |
| | 600 | 1655 | 1200 | 2694 | 2972 | / |
| | 800 | 1885 | 1230 | 3023 | 3299 | / |
| | 1000 | 2120 | 1260 | 3375 | 3669 | / |
| | 1200 | 2350 | 1290 | 3740 | 4056 | / |
| | 1400 | 2580 | 1320 | 4254 | 4574 | / |
| | 1600 | 2815 | 1350 | 4691 | 5147 | / |
| | 1800 | 3045 | 1380 | 5123 | 5501 | / |
| 2000 | 100 | 1125 | 1235 | 2836 | 3142 | / |
| | 200 | 1240 | 1250 | 2840 | 3146 | / |
| | 400 | 1475 | 1280 | 3002 | 3314 | / |
| | 600 | 1705 | 1310 | 3300 | 3642 | / |
| | 800 | 1940 | 1340 | 3844 | 4459 | / |
| | 1000 | 2170 | 1370 | 4112 | 4459 | / |
| | 1400 | 2635 | 1430 | 4966 | 5340 | / |
| | 1600 | 2865 | 1460 | 5625 | 6033 | / |
| | 1800 | 3100 | 1490 | 6115 | 6547 | / |
| | 2000 | 3330 | 1520 | 6648 | 7107 | / |



# ALL FLANGE 45° ANGLE BRANCH TEE




Type N



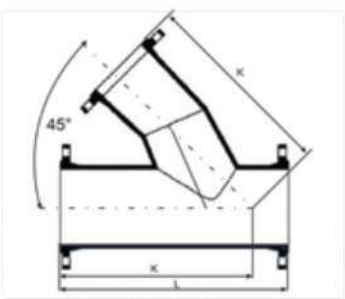


Type M

| All Flange 45° Angle Branch Tee | | | | | |
|---|---|---|---|---|---|
| **DN** | **dn** | **Type** | **L** | **K** | **Mass PN16 (kg)** |
| 80 | 80 | N | 500 | 375 | 23 |
| 100 | 80 | N | 500 | 390 | 27 |
| | 100 | N | 540 | 405 | 30 |
| 150 | 80 | N | 590 | 480 | 41 |
| | 100 | N | 640 | 480 | 45 |
| | 150 | N | 640 | 480 | 52 |
| 200 | 80 | N | 635 | 535 | 55 |
| | 100 | N | 635 | 535 | 58 |
| | 150 | N | 735 | 560 | 71 |
| | 200 | N | 735 | 560 | 81 |
| 250 | 80 | N | 660 | 585 | 75 |
| | 100 | N | 710 | 610 | 82 |
| | 150 | N | 830 | 640 | 100 |
| | 200 | N | 830 | 640 | 112 |
| | 250 | N | 830 | 640 | 126 |
| 300 | 80 | N | 685 | 610 | 97 |
| | 100 | N | 685 | 610 | 100 |
| | 150 | N | 790 | 660 | 120 |
| | 200 | N | 865 | 685 | 140 |
| | 250 | N | 930 | 715 | 161 |
| 350 | 300 | N | 930 | 715 | 177 |
| | 100 | N | 685 | 635 | 124 |
| | 150 | N | 740 | 660 | 140 |
| | 200 | N | 840 | 710 | 165 |
| | 250 | N | 880 | 740 | 185 |
| | 300 | M | 880 | 790 | 207 |
| | 350 | M | 880 | 790 | 168 |
| 400 | 100 | N | 760 | 710 | 165 |
| | 150 | N | 815 | 740 | 180 |
| | 200 | N | 865 | 760 | 200 |
| | 250 | N | 970 | 820 | 230 |
| | 300 | M | 970 | 870 | 254 |
| | 350 | M | 970 | 870 | 283 |
| | 400 | M | 970 | 870 | 310 |

# ALL FLANGE 45° ANGLE BRANCH TEE

| All Flange 45° Angle Branch Tee | | | | | |
|---|---|---|---|---|---|
| DN | dn | Type | L | K | Mass PN16 (kg) |
| 700 | 200 | N | 1040 | 1015 | 547 |
| | 250 | N | 1070 | 1040 | 582 |
| | 300 | N | 1170 | 1090 | 649 |
| | 350 | M | 1240 | 1125 | 708 |
| | 400 | M | 1310 | 1160 | 772 |
| | 450 | M | 1370 | 1195 | 860 |
| | 500 | M | 1440 | 1240 | 945 |
| | 600 | M | 1570 | 1370 | 1133 |
| | 700 | M | 1570 | 1370 | 1240 |
| 800 | 250 | N | 1180 | 1150 | 760 |
| | 300 | N | 1200 | 1170 | 800 |
| | 350 | N | 1270 | 1205 | 867 |
| | 400 | M | 1340 | 1240 | 938 |
| | 450 | M | 1400 | 1270 | 1009 |
| | 500 | M | 1470 | 1305 | 1128 |
| | 600 | M | 160 | 1370 | 1314 |
| | 700 | M | 1660 | 1450 | 1476 |
| | 800 | M | 1720 | 1520 | 1674 |
| 900 | 300 | N | 1270 | 1245 | 980 |
| | 350 | N | 1340 | 1280 | 1056 |
| | 400 | N | 1410 | 1315 | 1136 |
| | 450 | M | 1350 | 1350 | 1218 |
| | 500 | M | 1560 | 1390 | 1322 |
| | 600 | M | 1730 | 1475 | 1590 |
| | 700 | M | 1780 | 1540 | 1757 |
| | 800 | M | 1830 | 1610 | 1964 |
| | 900 | M | 1880 | 1680 | 2194 l |

| All Flange 45° Angle Branch Tee | | | | | |
|---|---|---|---|---|---|
| DN | dn | Type | L | K | Mass PN16 (kg) |
| 1000 | 350 | N | 1415 | 1380 | 1320 |
| | 400 | N | 1485 | 1415 | 1408 |
| | 450 | N | 1550 | 1450 | 1500 |
| | 500 | M | 1680 | 1510 | 1647 |
| | 600 | M | 1800 | 1575 | 1915 |
| | 700 | M | 1930 | 1640 | 2144 |
| | 800 | M | 2060 | 1700 | 2410 |
| | 900 | M | 2180 | 1980 | 2812 |
| | 1000 | M | 2180 | 1980 | 3052 |
| 1100 | 400 | N | 1560 | 1515 | 1677 |
| | 450 | N | 1625 | 1550 | 1777 |
| | 500 | M | 1730 | 1600 | 1922 |
| | 600 | M | 1830 | 1650 | 2200 |
| | 700 | M | 1980 | 1790 | 2490 |
| | 800 | M | 2120 | 1930 | 2827 |
| | 900 | M | 2265 | 2065 | 3205 |
| | 1000 | M | 2265 | 2065 | 3452 |
| | 1100 | M | 2265 | 2065 | 3703 |
| 1200 | 450 | N | 1780 | 1700 | 2210 |
| | 500 | N | 1880 | 1750 | 2367 |
| | 600 | M | 1980 | 1855 | 2695 |
| | 700 | M | 2125 | 1920 | 2988 |
| | 800 | M | 2270 | 1990 | 3330 |
| | 900 | M | 2415 | 2060 | 3693 |
| | 1000 | M | 2480 | 2280 | 4136 |
| | 1100 | M | 2480 | 2280 | 4410 |
| | 1200 | M | 2480 | 2280 | 4728 |

# ALL FLANGE RADIAL TEE



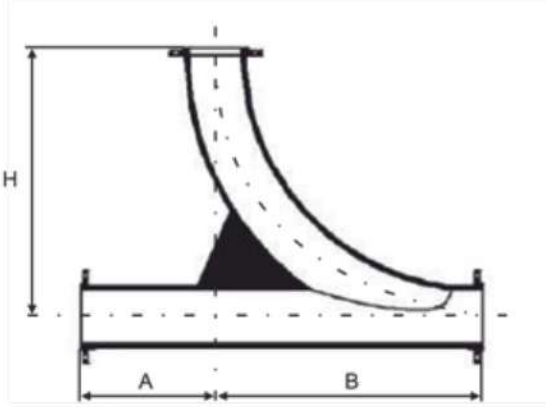


| All Flange Radial Tee | | | | | |
|---|---|---|---|---|---|
| DN | dn | A | B | H | Mass PN16 (kg) |
| 80 | 80 | 165 | 380 | 380 | 24 |
| 100 | 80 | 180 | 390 | 390 | 28 |
| | 100 | 180 | 400 | 400 | 31 |
| 150 | 80 | 220 | 395 | 415 | 40 |
| | 100 | 220 | 405 | 425 | 43 |
| | 150 | 220 | 450 | 450 | 52 |
| 200 | 80 | 220 | 400 | 440 | 53 |
| | 100 | 220 | 410 | 450 | 56 |
| | 150 | 260 | 455 | 475 | 67 |
| | 200 | 260 | 500 | 500 | 80 |

| All Flange Radial Tee | | | | | |
|---|---|---|---|---|---|
| DN | dn | A | B | H | Mass PN16 (kg) |
| 250 | 80 | 220 | 405 | 465 | 70 |
| | 100 | 220 | 415 | 475 | 74 |
| | 150 | 300 | 460 | 500 | 91 |
| | 200 | 300 | 505 | 525 | 104 |
| | 250 | 350 | 550 | 550 | 124 |
| 300 | 80 | 220 | 415 | 490 | 90 |
| | 100 | 300 | 425 | 500 | 101 |
| | 150 | 300 | 470 | 525 | 114 |
| | 200 | 400 | 515 | 550 | 137 |
| | 250 | 400 | 560 | 575 | 154 |
| | 300 | 400 | 600 | 600 | 174 |
| 350 | 100 | 300 | 430 | 525 | 126 |
| | 150 | 300 | 475 | 550 | 140 |
| | 200 | 400 | 520 | 575 | 166 |
| | 250 | 400 | 565 | 600 | 185 |
| | 300 | 400 | 605 | 625 | 206 |
| | 350 | 450 | 650 | 650 | 235 |
| 400 | 100 | 300 | 435 | 550 | 160 |
| | 150 | 300 | 480 | 575 | 170 |
| | 200 | 400 | 525 | 600 | 200 |
| | 250 | 400 | 570 | 625 | 218 |
| | 300 | 450 | 610 | 650 | 246 |
| | 350 | 450 | 655 | 675 | 272 |
| | 400 | 500 | 700 | 700 | 307 |
| 450 | 100 | 300 | 440 | 575 | 185 |
| | 150 | 300 | 485 | 600 | 197 |
| | 200 | 400 | 530 | 625 | 230 |
| | 250 | 450 | 575 | 650 | 260 |
| | 300 | 450 | 615 | 675 | 282 |
| | 350 | 450 | 660 | 700 | 310 |
| | 400 | 550 | 705 | 725 | 355 |
| | 450 | 550 | 750 | 750 | 387 |

# ALL FLANGE RADIAL TEE

| All Flange Radial Tee | | | | | |
|---|---|---|---|---|---|
| DN | dn | A | B | H | Mass PN16 (kg) |
| 500 | 150 | 300 | 495 | 625 | 241 |
| | 200 | 400 | 540 | 650 | 278 |
| | 250 | 450 | 585 | 675 | 310 |
| | 300 | 450 | 625 | 700 | 335 |
| | 350 | 450 | 670 | 725 | 364 |
| | 400 | 550 | 715 | 750 | 413 |
| | 450 | 650 | 760 | 775 | 446 |
| | 500 | 600 | 800 | 800 | 497 |
| 600 | 150 | 330 | 505 | 675 | 330 |
| | 200 | 400 | 550 | 700 | 375 |
| | 250 | 450 | 595 | 725 | 413 |
| | 300 | 450 | 635 | 750 | 447 |
| | 350 | 450 | 680 | 775 | 473 |
| | 400 | 550 | 725 | 800 | 532 |
| | 450 | 600 | 770 | 825 | 580 |
| | 500 | 600 | 810 | 850 | 626 |
| | 600 | 700 | 900 | 900 | 748 |
| 700 | 200 | 400 | 550 | 750 | 500 |
| | 250 | 450 | 595 | 775 | 554 |
| | 300 | 450 | 635 | 800 | 591 |
| | 350 | 450 | 680 | 825 | 632 |
| | 400 | 550 | 725 | 850 | 715 |
| | 450 | 600 | 770 | 875 | 779 |
| | 500 | 600 | 810 | 900 | 835 |
| | 600 | 700 | 900 | 950 | 995 |
| | 700 | 800 | 1000 | 1000 | 1154 |
| 800 | 250 | 450 | 595 | 825 | 678 |
| | 300 | 450 | 635 | 850 | 719 |
| | 350 | 450 | 680 | 875 | 765 |
| | 400 | 550 | 725 | 900 | 861 |
| | 450 | 600 | 770 | 925 | 934 |
| | 500 | 600 | 810 | 950 | 995 |
| | 600 | 700 | 900 | 1000 | 1174 |
| | 700 | 800 | 1000 | 1050 | 1353 |
| | 800 | 900 | 1100 | 1100 | 1565 |

| All Flange Radial Tee | | | | | |
|---|---|---|---|---|---|
| DN | dn | A | B | H | Mass PN16 (kg) |
| 900 | 300 | 450 | 640 | 900 | 851 |
| | 350 | 450 | 685 | 925 | 907 |
| | 400 | 550 | 730 | 950 | 1013 |
| | 450 | 600 | 775 | 975 | 1101 |
| | 500 | 600 | 815 | 1000 | 1167 |
| | 600 | 700 | 905 | 1050 | 1366 |
| | 700 | 800 | 1005 | 1100 | 1568 |
| | 800 | 900 | 1105 | 1150 | 1802 |
| | 900 | 100 | 1200 | 1200 | 2047 |
| 1000 | 350 | 450 | 695 | 975 | 1103 |
| | 400 | 550 | 740 | 1000 | 1224 |
| | 450 | 600 | 785 | 1025 | 1323 |
| | 500 | 600 | 825 | 1050 | 1394 |
| | 600 | 700 | 915 | 1100 | 1616 |
| | 700 | 800 | 1015 | 1150 | 1841 |
| | 800 | 900 | 1115 | 1200 | 2099 |
| | 900 | 100 | 1210 | 1250 | 2369 |
| | 1000 | 1100 | 1300 | 1300 | 2676 |
| 1100 | 400 | 550 | 750 | 1050 | 1416 |
| | 450 | 600 | 795 | 1075 | 1528 |
| | 500 | 600 | 835 | 1100 | 1605 |
| | 600 | 700 | 925 | 1150 | 1851 |
| | 700 | 800 | 1025 | 1200 | 2101 |
| | 800 | 900 | 1125 | 1250 | 2385 |
| | 900 | 100 | 1220 | 1300 | 2678 |
| | 100 | 1100 | 1310 | 1350 | 3012 |
| | 1100 | 1200 | 1400 | 1100 | 3353 |
| 1200 | 450 | 600 | 805 | 1125 | 1793 |
| | 500 | 600 | 845 | 1150 | 1877 |
| | 600 | 700 | 935 | 1200 | 2148 |
| | 700 | 800 | 1035 | 1250 | 2425 |
| | 800 | 900 | 1135 | 1300 | 2736 |
| | 900 | 100 | 123 | 1350 | 3056 |
| | 100 | 1100 | 1320 | 1400 | 3417 |
| | 1100 | 1200 | 1410 | 1450 | 3785 |
| | 1200 | 1300 | 1500 | 1500 | 4200 |

# ALL FLANGE CROSS



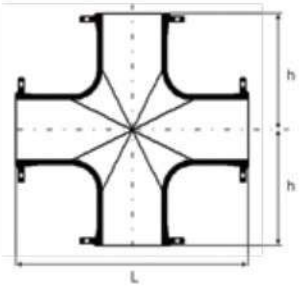

| All Flange Tee | | | | | | |
|---|---|---|---|---|---|---|
| Body | Banch | L | H | Mass (kg) | | |
| DN | dn | | | PN10 | PN16 | PN25 |
| 80 | 80 | 330 | 165 | 20,1 | 20,1 | 20,1 |
| 100 | 80 | 360 | 175 | 23 | 23 | 24,2 |
| | 100 | 360 | 180 | 25 | 25 | 2701 |
| 150 | 80 | 440 | 205 | 33, 1 | 33, 1 | 36,1 |
| | 100 | 440 | 210 | 35,1 | 35,1 | 38,1 |
| | 150 | 440 | 220 | 41,1 | 41,1 | 46,1 |
| 200 | 80 | 520 | 235 | 46,5 | 45,9 | 50,7 |
| | 100 | 520 | 240 | 48,5 | 46,9 | 53,7 |
| | 150 | 520 | 250 | 45,5 | 53,9 | 60,7 |
| | 200 | 520 | 260 | 61,5 | 60,9 | 70,7 |
| 250 | 80 | 700 | 265 | 37,5 | 37,5 | 44,5 |
| | 100 | 700 | 275 | 74,1 | 72,9 | 81,1 |
| | 150 | 700 | 300 | 82,1 | 80,9 | 93,1 |
| | 200 | 700 | 325 | 90,1 | 88,9 | 101 |
| | 250 | 700 | 350 | 102 | 101 | 117 |
| 300 | 100 | 800 | 300 | 100 | 98,8 | 112 |
| | 150 | 800 | 325 | 108 | 107 | 120 |
| | 200 | 800 | 350 | 116 | 115 | 130 |
| | 250 | 800 | 375 | 130 | 129 | 144 |
| | 300 | 800 | 400 | 144 | 143 | 164 |

| All Flange Tee | | | | | | |
|---|---|---|---|---|---|---|
| Body | Banch | L | H | Mass (kg) | | |
| DN | dn | | | PN10 | PN16 | PN25 |
| 350 | 100 | 850 | 325 | 122 | 128 | 145 |
| | 150 | 850 | 325 | 128 | 134 | 151 |
| | 200 | 850 | 325 | 132 | 140 | 159 |
| | 250 | 850 | 352 | 146 | 151 | 176 |
| | 300 | 850 | 425 | 154 | 160 | 187 |
| | 350 | 850 | 425 | 174 | 186 | 219 |
| 400 | 100 | 900 | 350 | 149 | 160 | 183 |
| | 150 | 900 | 350 | 151 | 164 | 191 |
| | 200 | 900 | 350 | 159 | 170 | 197 |
| | 250 | 900 | 350 | 160 | 174 | 225 |
| | 300 | 900 | 450 | 182 | 220 | 236 |
| | 350 | 900 | 450 | 202 | 228 | 249 |
| | 400 | 900 | 450 | 211 | 234 | 259 |
| 450 | 100 | 950 | 375 | 186 | 203 | 235 |
| | 150 | 950 | 375 | 198 | 215 | 248 |
| | 200 | 950 | 375 | 213 | 230 | 265 |
| | 250 | 950 | 375 | 231 | 248 | 286 |
| | 300 | 950 | 475 | 253 | 270 | 312 |
| | 350 | 950 | 475 | 272 | 296 | 343 |
| | 400 | 950 | 475 | 296 | 324 | 378 |
| | 450 | 950 | 475 | 320 | 354 | 416 |
| 500 | 100 | 1000 | 400 | 215 | 247 | 272 |
| | 150 | 1000 | 400 | 223 | 251 | 280 |
| | 200 | 1000 | 400 | 225 | 255 | 284 |
| | 250 | 1000 | 400 | 231 | 281 | 301 |
| | 300 | 1000 | 500 | 249 | 275 | 316 |
| | 350 | 1000 | 500 | 273 | 290 | 338 |
| | 400 | 1000 | 500 | 279 | 317 | 364 |
| | 450 | 1000 | 500 | 293 | 361 | 396 |
| | 500 | 1000 | 500 | 299 | 359 | 406 |
| 600 | 100 | 1100 | 450 | 242 | 311 | 329 |
| | 150 | 1100 | 450 | 272 | 333 | 365 |
| | 200 | 1100 | 450 | 316 | 369 | 401 |
| | 250 | 1100 | 450 | 321 | 373 | 409 |
| | 300 | 1100 | 550 | 330 | 400 | 420 |
| | 350 | 1100 | 550 | 358 | 413 | 451 |
| | 400 | 1100 | 550 | 364 | 427 | 479 |
| | 450 | 1100 | 550 | 382 | 487 | 521 |
| | 500 | 1100 | 550 | 403 | 494 | 553 |
| | 600 | 1100 | 550 | 416 | 521 | 579 |

# DOUBLE SOCKET / FLANGE 90°
# DUCK-FOOT BEND

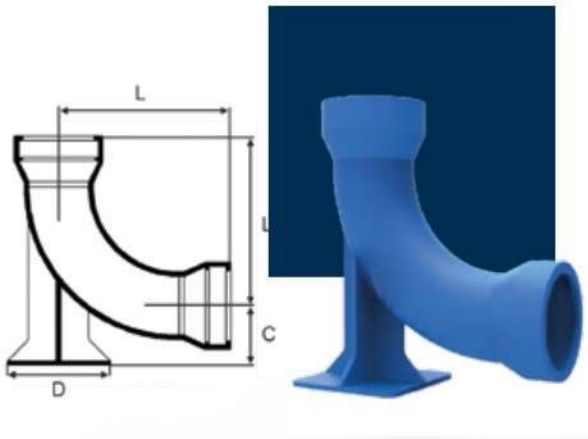


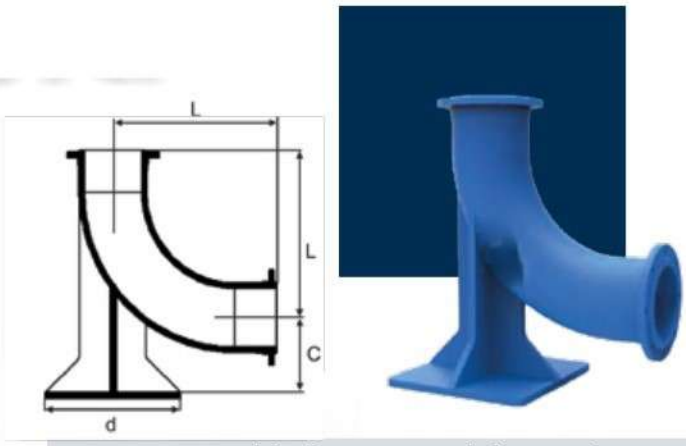


**Double Socket 90° Duck-foot Bend**

| DN | L | C | D | Mass (kg) |
|---|---|---|---|---|
| | | | | T-type |
| 100 | 120 | 125 | 200 | 14,8 |
| 150 | 170 | 160 | 250 | 28,5 |
| 200 | 220 | 190 | 300 | 44,5 |
| 250 | 270 | 225 | 350 | 68,5 |
| 300 | 320 | 255 | 400 | 100 |
| 350 | 370 | 290 | 450 | 133 |
| 400 | 420 | 320 | 500 | 180 |
| 450 | 470 | 355 | 550 | 230 |
| 500 | 520 | 385 | 600 | 294 |
| 600 | 620 | 450 | 700 | 442 |
| 700 | 720 | 515 | 800 | 618 |
| 800 | 820 | 580 | 900 | 832 |
| 900 | 920 | 645 | 1000 | 1113 |
| 1000 | 1020 | 710 | 1100 | 1435 |
| 1200 | 1220 | 840 | 1300 | 2153 |

**Double Flange 90° Duck-foot Bend**

| DN | L | c | d | Mass (kg) | | |
|---|---|---|---|---|---|---|
| | | | | PN10 | PN16 | PN25 |
| 100 | 180 | 125 | 200 | 17,8 | 17,8 | 18,8 |
| 150 | 220 | 160 | 250 | 30 | 30 | 32 |
| 200 | 260 | 190 | 300 | 46,5 | 46 | 50,5 |
| 250 | 350 | 225 | 350 | 75 | 75 | 82 |
| 300 | 400 | 255 | 400 | 106 | 105 | 116 |
| 350 | 450 | 290 | 450 | 139 | 145 | 162 |
| 400 | 500 | 320 | 500 | 178 | 189 | 212 |
| 450 | 550 | 355 | 550 | 229 | 249 | 275 |
| 500 | 600 | 385 | 600 | 283 | 313 | 337 |
| 600 | 700 | 450 | 700 | 428 | 481 | 509 |
| 700 | 800 | 515 | 800 | 700 | 741 | 811 |
| 800 | 900 | 580 | 900 | 846 | 884 | 982 |
| 900 | 1000 | 645 | 1000 | 1118 | 1165 | 1286 |
| 1000 | 1100 | 710 | 1100 | 1698 | 1781 | 1937 |
| 1200 | 1300 | 840 | 1300 | 2599 | 2709 | / |



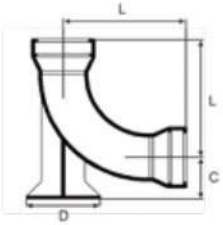


**80mm Flange and Socket 90° Short Hydrant Duckfoot Bends, Class K12**

| DN | C | Mass (kg) |
|---|---|---|
| 80 | 95 | 12,5 |
| 100 | 102 | 15,9 |
| 150 | 130 | 21,5 |

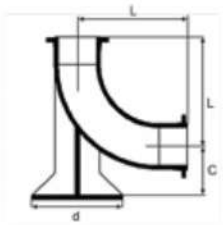


**Double Flange 90° Hydrant Duckfoot Bends, Class K12**

| DN | | B | C | D | Mass |
|---|---|---|---|---|---|
| Body | Branch | | | | (kg) |
| 80 | 80 | 165 | 110 | 180 | 14 |
| 100 | 80 | 180 | 125 | 200 | 17 |
| 150 | 80 | 220 | 160 | 200 | 28 |

# BELL MOUTH



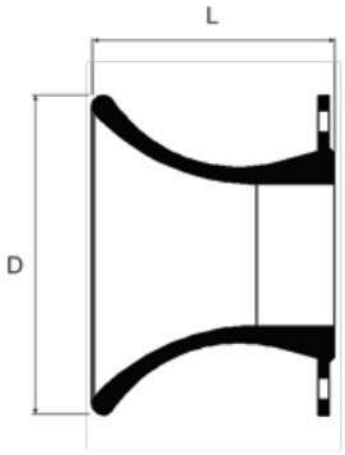


| Bell Mouth | | | | | |
|---|---|---|---|---|---|
| DN | L | D | Mass (kg) | | |
| | | | PN10 | PN16 | PN25 |
| 80 | 135 | 160 | 5,2 | 5,2 | 5,2 |
| 100 | 140 | 185 | 6,2 | 6,2 | 6,7 |
| 150 | 155 | 245 | 10,1 | 10,1 | 11,1 |
| 200 | 170 | 310 | 15 | 14,8 | 16,8 |
| 250 | 190 | 370 | 21 | 20,5 | 24,5 |
| 300 | 210 | 435 | 28,5 | 28,5 | 33,5 |
| 3500 | 225 | 495 | 35,5 | 38 | 45 |
| 400 | 245 | 560 | 45 | 49,5 | 60,5 |
| 450 | 260 | 620 | 54 | 62 | 73 |
| 500 | 280 | 685 | 67 | 80 | 91 |
| 600 | 300 | 810 | 96,5 | 120 | 132 |
| 700 | 340 | 945 | 135 | 146 | 178,5 |
| 800 | 380 | 1055 | 182 | 197 | 243 |
| 900 | 420 | 1165 | 231 | 250 | 306 |
| 1000 | 440 | 1290 | 297 | 331 | 404 |
| 1200 | 490 | 1515 | 457 | 512 | 603 |
| 1400 | 515 | 1725 | 646 | 702 | 842 |
| 1600 | 540 | 1945 | 908 | 995 | 1156 |
| 1800 | / | / | 1185 | 1297 | 1514 |
| 2000 | / | / | 1530 | 1668 | 1990 |

# BLANK FLANGE PN10/PN16/PN25/PN40

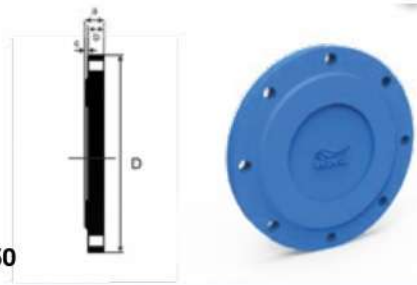


DN50~DN250

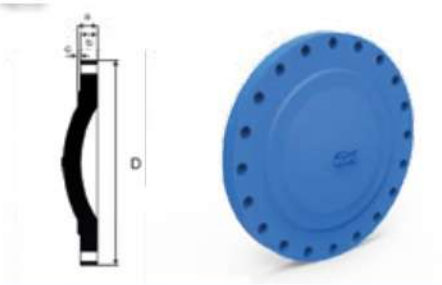


≥ DN300

| Blank Flange PN10 | | | | | |
|---|---|---|---|---|---|
| DN | D | a | b | c | Mass (kg) |
| 80 | 200 | 19 | 16 | 3 | 3,5 |
| 100 | 220 | 19 | 16 | 3 | 4,3 |
| 150 | 285 | 19 | 16 | 3 | 7,2 |
| 200 | 340 | 20 | 17 | 3 | 11,0 |
| 250 | 400 | 22 | 19 | 3 | 16,9 |
| 300 | 455 | 24,5 | 20,5 | 4 | 24,0 |
| 350 | 505 | 24,5 | 20,5 | 4 | 29,5 |
| 400 | 565 | 24,5 | 20,5 | 4 | 36,5 |
| 450 | 615 | 25,5 | 21,5 | 4 | 46,5 |
| 500 | 670 | 26,5 | 22,5 | 4 | 56,0 |
| 600 | 780 | 30 | 25 | 5 | 85,0 |
| 700 | 895 | 32,5 | 27,5 | 5 | 123 |
| 800 | 1015 | 35 | 30 | 5 | 172 |
| 900 | 1115 | 37,5 | 32,5 | 5 | 224 |
| 1000 | 1230 | 40 | 35 | 5 | 293 |
| 1200 | 1455 | 45 | 40 | 5 | 575 |
| 1400 | 1675 | 46 | 41 | 5 | 739 |
| 1600 | 1915 | 49 | 44 | 5 | 1239 |
| 1800 | 2115 | 52 | 47 | 5 | 1717 |
| 2000 | 2325 | 55 | 50 | 5 | 2272 |

| Blank Flange PN16 | | | | | |
|---|---|---|---|---|---|
| DN | D | a | b | c | Mass (kg) |
| 80 | 200 | 19 | 16 | 3 | 3,5 |
| 100 | 220 | 19 | 16 | 3 | 4,3 |
| 150 | 285 | 19 | 16 | 3 | 7,2 |
| 200 | 340 | 20 | 17 | 3 | 10,8 |
| 250 | 400 | 22 | 19 | 3 | 16,6 |
| 300 | 455 | 24,5 | 20,5 | 4 | 23,5 |
| 350 | 520 | 26,5 | 22,5 | 4 | 33,5 |
| 400 | 580 | 28 | 24 | 4 | 44,5 |
| 450 | 640 | 30 | 26 | 4 | 63,5 |
| 500 | 715 | 31,5 | 27,5 | 4 | 77,0 |
| 600 | 840 | 36 | 31 | 5 | 121 |
| 700 | 910 | 39,5 | 34,5 | 5 | 156 |
| 800 | 1025 | 43 | 38 | 5 | 218 |
| 900 | 1125 | 46,5 | 41,5 | 5 | 286 |
| 1000 | 1255 | 50 | 45 | 5 | 387 |
| 1200 | 1485 | 57 | 52 | 5 | 662 |
| 1400 | 1685 | 60 | 55 | 5 | 994 |
| 1600 | 1930 | 65 | 60 | 5 | 1409 |
| 1800 | 2130 | 70 | 65 | 5 | 1858 |
| 200 | 2345 | 75 | 70 | 5 | 2407 |

| Blank Flange PN25 | | | | | |
|---|---|---|---|---|---|
| DN | D | a | b | c | Mass (kg) |
| 80 | 200 | 19 | 16 | 3 | 3,5 |
| 100 | 235 | 19 | 16 | 3 | 4,8 |
| 150 | 300 | 20 | 17 | 3 | 8,3 |
| 200 | 360 | 22 | 19 | 3 | 13,3 |
| 250 | 425 | 24,5 | 21,5 | 4 | 21,0 |
| 300 | 485 | 27,5 | 23,5 | 4 | 30,0 |
| 350 | 555 | 30 | 26 | 4 | 43,5 |
| 400 | 620 | 32 | 28 | 4 | 58,0 |
| 450 | 670 | 34,5 | 30,5 | 4 | 79,0 |
| 500 | 730 | 36,5 | 32,5 | 4 | 94,0 |
| 600 | 845 | 42 | 37 | 5 | 144 |

| Blank Flange PN40 | | | | | |
|---|---|---|---|---|---|
| DN | D | a | b | c | Mass (kg) |
| 80 | 200 | 19 | 16 | 19 | 3,7 |
| 100 | 235 | 19 | 16 | 19 | 5,1 |
| 150 | 300 | 28 | 23 | 26 | 11,4 |
| 200 | 375 | 30 | 27 | 30 | 20,5 |
| 250 | 450 | 34,5 | 31,5 | 34,5 | 34,5 |
| 300 | 515 | 39,5 | 35,5 | 39,5 | 51 |
| 350 | 580 | 44 | 40 | 44 | 74 |
| 400 | 660 | 48 | 44 | 48 | 106 |
| 450 | 685 | 50 | 46 | 50 | 118 |
| 500 | 755 | 52 | 48 | 52 | 150 |
| 600 | 845 | 758 | 53 | 58 | 232 |

# REDUCING FLANGE

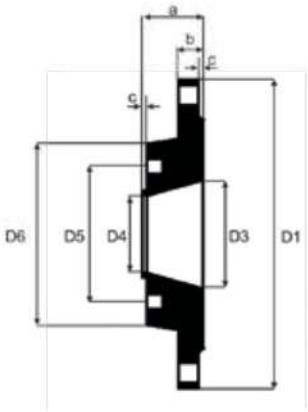




| DN | dn | PN16 | | | | | | | | | | | Mass |
|---|---|---|---|---|---|---|---|---|---|---|---|---|---|
| | | D1 | D2 | D3 | D4 | D5 | D6 | n1 | n1 | d | M | a | (kg) |
| 200 | 80 | 340 | 295 | 118 | 84 | 160 | 200 | 12 | 8 | 23 | 16 | 39 | 13,0 l |
| | 100 | 340 | 295 | 144 | 104 | 180 | 220 | 12 | 8 | 23 | 16 | 39 | 13,0 |
| 250 | 100 | 400 | 355 | 148 | 104 | 180 | 220 | 12 | 8 | 28 | 16 | 41 | 18,6 |
| | 150 | 455 | 355 | 200 | 154 | 240 | 285 | 12 | 8 | 28 | 20 | 43 | 18,8 |
| 300 | 100 | 455 | 410 | 148 | 104 | 180 | 220 | 12 | 8 | 28 | 16 | 44 | 26,3 |
| | 150 | 455 | 410 | 200 | 154 | 240 | 285 | 12 | 8 | 28 | 20 | 44 | 25,9 |
| | 200 | 520 | 410 | 250 | 205 | 295 | 340 | 12 | 12 | 28 | 20 | 45 | 24,7 |
| 350 | 200 | 520 | 470 | 250 | 205 | 295 | 340 | 16 | 12 | 28 | 20 | 46 | 32,6 |
| | 250 | 520 | 470 | 303 | 254 | 355 | 400 | 16 | 12 | 28 | 24 | 48 | 36,5 |
| 400 | 100 | 580 | 525 | 148 | 104 | 180 | 220 | 16 | 8 | 31 | 16 | 47 | 46,0 |
| | 150 | 580 | 525 | 205 | 155 | 240 | 285 | 16 | 8 | 31 | 20 | 47 | 44,8 |
| | 200 | 580 | 525 | 270 | 205 | 295 | 340 | 16 | 12 | 31 | 20 | 48 | 42,4 |
| | 300 | 580 | 525 | 354 | 309 | 410 | 455 | 16 | 12 | 31 | 24 | 52 | 44,5 |
| 500 | 100 | 715 | 650 | 148 | 104 | 180 | 220 | 20 | 8 | 34 | 16 | 50 | 82,7 |
| | 150 | 715 | 650 | 203 | 155 | 240 | 285 | 20 | 8 | 34 | 20 | 50 | 81,3 |
| | 200 | 715 | 650 | 250 | 205 | 295 | 340 | 20 | 12 | 34 | 20 | 50 | 79,0 |
| | 300 | 715 | 650 | 354 | 309 | 400 | 455 | 20 | 12 | 34 | 24 | 56 | 74,7 |
| | 400 | 715 | 650 | 464 | 409 | 525 | 580 | 20 | 16 | 34 | 27 | 60 | 69,6 |
| 600 | 100 | 840 | 770 | 148 | 104 | 180 | 220 | 20 | 8 | 37 | 16 | 55 | 130,7 |
| | 200 | 840 | 770 | 250 | 205 | 295 | 340 | 20 | 12 | 37 | 20 | 56 | 126,6 |
| | 300 | 840 | 770 | 354 | 309 | 410 | 455 | 20 | 12 | 37 | 24 | 60 | 119,1 |
| | 400 | 840 | 770 | 464 | 409 | 525 | 580 | 20 | 16 | 37 | 27 | 64 | 112,6 |
| 800 | 100 | 1025 | 950 | 148 | 104 | 180 | 220 | 24 | 8 | 40 | 16 | 62 | 235,0 |
| | 150 | 1025 | 950 | 205 | 155 | 240 | 295 | 24 | 8 | 40 | 20 | 62 | 233,0 |
| | 200 | 1025 | 950 | 250 | 205 | 295 | 340 | 24 | 12 | 40 | 20 | 63 | 229,3 |
| | 300 | 1025 | 950 | 534 | 309 | 410 | 455 | 24 | 12 | 40 | 24 | 67 | 220,5 |
| | 400 | 1025 | 950 | 464 | 409 | 525 | 580 | 24 | 16 | 40 | 27 | 70 | 209,1 |
| | 450 | 1025 | 950 | 515 | 455 | 585 | 640 | 24 | 20 | 40 | 27 | 73 | 205,6 |
| | 500 | 1025 | 950 | 566 | 508 | 650 | 715 | 24 | 20 | 40 | 30 | 74 | 200,9 |
| | 600 | 1025 | 950 | 670 | 608 | 770 | 840 | 24 | 20 | 40 | 33 | 79 | 191,1 |

# DOUBLE FLANGE 90° LONG RADIUS
# ALL FLANGE Y PIPE BEND



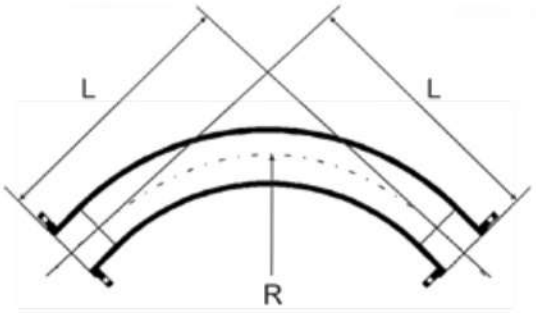


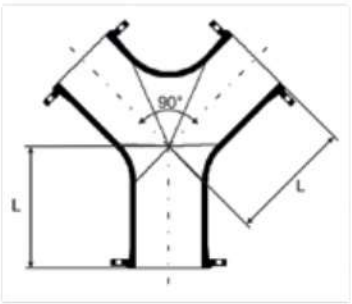


| Double Flange 90° Long Radius Bend | | | |
|---|---|---|---|
| **DN** | **L** | **R** | **Mass (kg)** |
| 80 | 380 | 330 | 17 |
| 100 | 400 | 340 | 18 |
| 150 | 450 | 385 | 30 |
| 200 | 500 | 430 | 45 |
| 250 | 550 | 475 | 65 |
| 300 | 600 | 515 | 90 |
| 350 | 650 | 560 | 121 |
| 400 | 700 | 605 | 157 |
| 450 | 750 | 650 | 197 |
| 500 | 800 | 690 | 252 |
| 600 | 300 | 780 | 379 |

| All Flange Y Pipe | | |
|---|---|---|
| **DN** | **L** | **Mass (kg)** |
| 80 | 165 | 15,6 |
| 100 | 180 | 19,3 |
| 150 | 220 | 32,5 |
| 200 | 260 | 49 |
| 250 | 350 | 81 |
| 300 | 400 | 115 |
| 350 | 450 | 166 |
| 400 | 500 | 231 |
| 450 | 550 | 295 |
| 500 | 600 | 385 |
| 600 | 700 | 591 |

# DOUBLE FLANGE PIPE K12 (CAST ON)



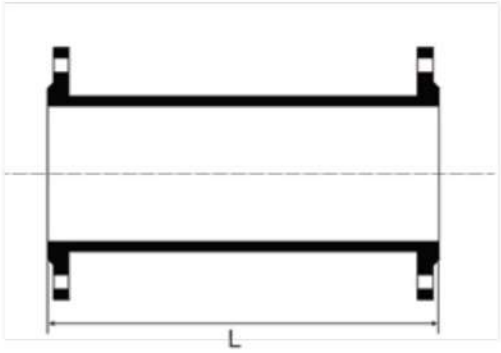


| DN | L | Mass (kg) PN16 |
|---|---|---|
| 80 | 200 | 9 |
| | 250 | 10 |
| | 300 | 11 |
| | 350 | 12 |
| | 400 | 12,5 |
| | 450 | 13 |
| | 500 | 14 |
| | 600 | 15,5 |
| | 700 | 17 |
| | 800 | 19 |
| 100 | 200 | 10,5 |
| | 250 | 11 |
| | 300 | 12 |
| | 350 | 13 |
| | 400 | 14 |
| | 450 | 15 |
| | 500 | 15,5 |
| | 600 | 18 |
| | 700 | 19 |
| | 800 | 21 |
| | 900 | 23 |
| | 1000 | 25 |

| DN | L | Mass (kg) PN16 |
|---|---|---|
| 200 | 200 | 22 |
| | 250 | 24 |
| | 300 | 26 |
| | 350 | 28 |
| | 400 | 30 |
| | 450 | 32 |
| | 500 | 34 |
| | 600 | 38 |
| | 700 | 42 |
| | 800 | 46 |
| | 900 | 50 |
| | 1000 | 54 |
| 250 | 200 | 29 |
| | 250 | 32 |
| | 300 | 35 |
| | 350 | 35 |
| | 400 | 40 |
| | 450 | 43 |
| | 500 | 45 |
| | 600 | 51 |
| | 700 | 56 |
| | 800 | 61 |
| | 900 | 67 |
| | 1000 | 72 |

| DN | L | Mass (kg) PN16 |
|---|---|---|
| 300 | 200 | 39 |
| | 250 | 42 |
| | 300 | 45 |
| | 350 | 49 |
| | 400 | 52 |
| | 450 | 56 |
| | 500 | 59 |
| | 600 | 66 |
| | 700 | 72 |
| | 800 | 79 |
| | 900 | 86 |
| | 1000 | 93 |
| | 1200 | 106 |
| 400 | 300 | 74 |
| | 400 | 84 |
| | 500 | 94 |
| | 600 | 104 |
| | 700 | 114 |
| | 800 | 124 |
| | 900 | 134 |
| | 1000 | 144 |
| | 1200 | 164 |

# DOUBLE FLANGE PIPE K12 (CAST ON)

| DN | 1000L | Mass (kg) PN16 |
|---|---|---|
| 450 | 300 | 89 |
| | 400 | 101 |
| | 500 | 113 |
| | 600 | 125 |
| | 700 | 136 |
| | 800 | 148 |
| | 900 | 160 |
| | 1000 | 172 |
| | 1200 | 195 |
| | 1300 | 207 |
| 500 | 300 | 116 |
| | 400 | 130 |
| | 500 | 143 |
| | 600 | 157 |
| | 700 | 171 |
| | 800 | 185 |
| | 900 | 199 |
| | 1000 | 212 |
| | 1500 | 281 |
| | 2000 | 350 |
| 600 | 300 | 170 |
| | 400 | 188 |
| | 500 | 206 |
| | 600 | 224 |
| | 700 | 242 |
| | 800 | 261 |
| | 900 | 279 |
| | 1000 | 297 |
| | 1500 | 388 |
| | 2000 | 479 |
| 700 | 300 | 181 |
| | 400 | 204 |
| | 500 | 227 |
| | 600 | 250 |
| | 700 | 273 |
| | 800 | 296 |
| | 900 | 320 |
| | 1000 | 343 |
| | 1500 | 388 |
| | 2000 | 479 |

| DN | 1000L | Mass (kg) PN16 |
|---|---|---|
| 800 | 300 | 234 |
| | 400 | 263 |
| | 500 | 291 |
| | 600 | 320 |
| | 700 | 349 |
| | 800 | 377 |
| | 900 | 406 |
| | 1000 | 434 |
| | 1500 | 577 |
| | 2000 | 720 |
| 900 | 300 | 280 |
| | 400 | 315 |
| | 500 | 349 |
| | 600 | 384 |
| | 700 | 418 |
| | 800 | 453 |
| | 900 | 487 |
| | 1000 | 522 |
| | 1500 | 694 |
| | 2000 | 867 |
| 1000 | 300 | 370 |
| | 400 | 411 |
| | 500 | 452 |
| | 600 | 493 |
| | 700 | 534 |
| | 800 | 575 |
| | 900 | 616 |
| | 1000 | 657 |
| | 1500 | 863 |
| | 2000 | 1068 |
| 1100 | 1000 | 764 |
| | 1500 | 1005 |
| | 2000 | 1246 |
| 1200 | 1000 | 929 |
| | 1500 | 1208 |
| | 2000 | 1487 |
| 1400 | 1000 | 1158 |
| | 1500 | 1521 |
| | 2000 | 1884 |
| 1600 | 1000 | 1533 |
| | 1500 | 1991 |
| | 2000 | 2449 |

# DOUBLE FLANGE PIPE (WELD ON)



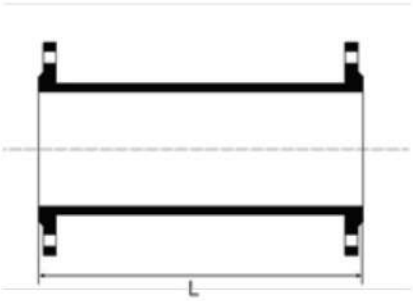


| Double Flange Pipe (Weld on) | | | | |
|---|---|---|---|---|
| DN | L | Mass (kg) | | |
| | | PN10 | PN16 | PN25 |
| 80 | 1000 | 24 | 24 | 24 |
| | 2000 | 40 | 40 | 40 |
| | 3000 | 45 | 45 | 45 |
| | 4000 | 57 | 57 | 57 |
| | 5000 | 69 | 69 | 69 |
| | 5500 | 76 | 76 | 76 |
| | 5700 | 78 | 78 | 78 |
| 100 | 2000 | 46 | 46 | 47 |
| | 3000 | 56 | 56 | 57 |
| | 4000 | 71 | 71 | 72 |
| | 5000 | 86 | 86 | 87 |
| | 5500 | 94 | 94 | 95 |
| | 5700 | 97 | 97 | 98 |
| 150 | 2000 | 72 | 72 | 74 |
| | 3000 | 85 | 85 | 87 |
| | 4000 | 108 | 108 | 110 |
| | 5000 | 130 | 130 | 132 |
| | 5500 | 142 | 142 | 144 |
| | 5700 | 146 | 146 | 148 |
| 200 | 2000 | 102 | 102 | 106 |
| | 3000 | 114 | 114 | 118 |
| | 4000 | 145 | 145 | 149 |
| | 5000 | 175 | 175 | 179 |
| | 5500 | 191 | 191 | 195 |
| | 5700 | 197 | 197 | 201 |
| 250 | 2000 | 137 | 137 | 145 |
| | 3000 | 151 | 151 | 159 |
| | 4000 | 191 | 191 | 199 |
| | 5000 | 231 | 231 | 239 |
| | 5500 | 252 | 252 | 260 |
| | 5700 | 260 | 260 | 268 |

| Double Flange Pipe (Weld on) | | | | |
|---|---|---|---|---|
| DN | L | Mass (kg) | | |
| | | PN10 | PN16 | PN25 |
| 300 | 2000 | 173 | 173 | 183 |
| | 3000 | 191 | 191 | 201 |
| | 4000 | 242 | 242 | 252 |
| | 5000 | 292 | 292 | 302 |
| | 5500 | 318 | 318 | 328 |
| | 5700 | 328 | 328 | 338 |
| 350 | 2000 | 219 | 225 | 243 |
| | 3000 | 242 | 248 | 266 |
| | 4000 | 305 | 311 | 329 |
| | 5000 | 368 | 374 | 392 |
| | 5500 | 400 | 406 | 424 |
| | 5700 | 413 | 419 | 437 |
| 400 | 2000 | 262 | 270 | 294 |
| | 3000 | 289 | 297 | 321 |
| | 4000 | 364 | 372 | 396 |
| | 5000 | 440 | 448 | 472 |
| | 5500 | 478 | 486 | 510 |
| | 5700 | 493 | 501 | 525 |
| 450 | 3000 | 340 | 354 | 386 |
| | 4000 | 430 | 444 | 476 |
| | 5000 | 519 | 533 | 565 |
| | 5500 | 564 | 576 | 610 |
| | 5700 | 582 | 596 | 628 |
| 500 | 3000 | 403 | 433 | 457 |
| | 4000 | 508 | 538 | 562 I |
| | 5000 | 612 | 642 | 666 |
| | 5500 | 664 | 694 | 718 |
| | 5700 | 685 | 715 | 739 |

| Double Flange Pipe (Weld on) | | | | |
|---|---|---|---|---|
| DN | L | Mass (kg) | | |
| | | PN10 | PN16 | PN25 |
| 600 | 3000 | 530 | 582 | 612 |
| | 4000 | 668 | 720 | 150 |
| | 5000 | 805 | 857 | 887 |
| | 5500 | 874 | 926 | 956 |
| | 5700 | 901 | 953 | 983 |
| 700 | 3000 | 712 | 738 | 808 |
| | 4000 | 886 | 912 | 982 |
| | 5000 | 1060 | 1086 | 1156 |
| | 5500 | 1147 | 1173 | 1243 |
| | 5700 | 1182 | 1208 | 1278 |
| 800 | 3000 | 846 | 880 | 980 |
| | 4000 | 1061 | 1095 | 1195 |
| | 5000 | 1276 | 1310 | 1410 |
| | 5500 | 1384 | 1418 | 1518 |
| | 5700 | 1427 | 1461 | 1561 |
| 900 | 3000 | 1031 | 1067 | 1189 |
| | 4000 | 1291 | 1327 | 1449 |
| | 5000 | 1555 | 1587 | 1709 |
| | 5500 | 1682 | 1718 | 1840 |
| | 5700 | 1734 | 1770 | 1892 |
| 1000 | 3000 | 1218 | 1288 | 1444 |
| | 4000 | 1528 | 1598 | 1754 |
| | 5000 | 1837 | 1907 | 2063 |
| | 5500 | 1992 | 2062 | 2218 |
| | 5700 | 2054 | 2124 | 2280 |
| 1200 | 3000 | 1621 | 1731 | 1931 |
| | 4000 | 2041 | 2151 | 2351 |
| | 5000 | 2461 | 2571 | 2771 |
| | 5500 | 2671 | 2781 | 2981 |
| | 5700 | 2755 | 2865 | 3065 |